ICF-SW77

SERVICE MANUAL

US Model
Canadian Model
AEP Model
UK Model
E Model
Australian Model

SPECIFICATIONS

Circuit system
FM: Single conversion superheterodyne
AM: Dual conversion superheterodyne

Frequency range

Type	Frequency coverage			
	FM*	LW	MW	SW
1	76.0–108MHz	150 ———	———	——— 29,999.9kHz
2	87.5–108MHz	150 ———	———	——— 29,999.9kHz
3	87.5–108MHz	150–285kHz	531 ———	——— 26,100kHz
4	87.5–108MHz	150–285kHz	531–1,602kHz	3,850–26,100kHz

*Stereo reception when using stereo earphones

Type 1: Countries that are not listed below
Type 2: Germany, Austria, and Scandinavian countries
Type 3: Saudi Arabia
Type 4: Italy

Intermediate frequency
FM:10.7MHz
LW/MW/SW: 55.845MHz (first)
455kHz (second)

Antennas
FM/SW: Telescopic antenna
MW/LW: Built-in ferrite bar antenna

Speaker
Approx. 125 × 77 mm (5 × 3 in.)
8Ω

Power output
400 mW (at 10 % harmonic distortion)

Outputs
Recording output jack (stereo minijack)
Output level 138 mV (–15 dB)
Output impedance less than 10 kilohm
Earphone jack (stereo minijack)

Power requirements
6 V DC
Four R14 (size C) batteries
DC IN 6 V jack accepts:
- supplied AC power adaptor (except for Australian model)

Where purchased	AC power adaptor	Operating voltage
US model	AC-E604	120 V AC, 60 Hz
Canadian model	AC-E602	110 – 120 V/ 220 – 120 V AC, adjust-able, 50/ 60 Hz
UK model	AC-E603	240 V AC, 50 Hz
AEP, E Australian model	AC-E600	110 – 120 V/ 220 – 120 V AC, adjust-able, 50/ 60 Hz

- DCC-E160L car battery cord (not supplied) for use with 12 V car battery

Battery life
Approx. 20 hours (FM reception)
Approx. 12 hours (AM reception)
of listening for fours hours a day at a normal volume, using Sony SUM-2(NS) batteries.

— Continued on next page —

LW/MW/SW/FM STEREO PLL SYNTHESIZED RECEIVER

SONY®

Dimensions	276 × 172.5 × 46.5 mm (w/h/d) ($10^{11}/8 \times 6^{13}/16 \times 1^{13}/16$inches) including projecting parts and controls with antenna retracted
Weight	Approx. 1.48 kg (3 1/4 lb) including batteries
Accessories supplied	AC power adaptor* (1) AC plug adaptor* (1) Stereo earphones (1) Ear pad (2) Carrying belt (1) SW compact antenna (1) External antenna connector (1) "Wave Handbook" (1) "How to Catch the Wave" (1) "Preset Frequency List" *Not provided with certain models

Design and specifications subject to change without notice.

Note
This appliance conforms with EEC Directive 87/308/EEC regarding interference suppression.

The ICF-SW77 is available in various models with differences in frequency coverage and other variances, corresponding to the regulations of different countries.
The main differences are shown in the following table. Please check the type of your unit with respect to each item. The AM (LW/MW/SW) and FM frequency ranges are indicated inside the top panel of your unit.

Despite the above differences, the operating procedure of all the units are identical. The differences are clearly described in the text as required.

Type	Frequency coverage			
	FM	LW	MW	SW
1	76.0–108 MHz	150 ———	———	29,999.9 kHz
2	87.5–108 MHz	150 ———	———	29,999.9 kHz
3	87.5–108 MHz	150–285 kHz	531———	26,100 kHz
4	87.5–108 MHz	150–285 kHz	531–1,602 kHz	3,850–26,100 kHz

Type	SSB reception
1	Provided
2	Provided
3	Not provided (No SSB key)
4	Provided

SAFETY-RELATED COMPONENT WARNING!!

COMPONENTS IDENTIFIED BY MARK ⚠ OR DOTTED LINE WITH MARK ⚠ ON THE SCHEMATIC DIAGRAMS AND IN THE PARTS LIST ARE CRITICAL TO SAFE OPERATION. REPLACE THESE COMPONENTS WITH SONY PARTS WHOSE PART NUMBERS APPEAR AS SHOWN IN THIS MANUAL OR IN SUPPLEMENTS PUBLISHED BY SONY.

Features

- An LW/MW/SW/FM portable receiver with worldwide band coverage.
- Quartz controlled PLL (Phase Locked Loop) synthesizer system using a microcomputer makes pinpoint tuning easy.
- FM stereo reception for earphones.
- Smooth tuning with rotary manual tuning dial.
  For AM reception, you can tune in by 50 Hz interval when you select "SLOW" for the tuning interval.
- Synchronous detector circuit reduces interference from adjacent stations (beats) and distortion due to fading in AM reception.

- Choice of Preset Stations direct, manual, or scan tuning.

  Preset Station Tuning...Tuning in a station by selecting the name of the preset station. (Page 12)
  Direct tuning...Tuning in the station by inputting the frequency of the station directly. (Page 16)
  Manual tuning...Tuning in the station by turning the dial. Even if you don't know the frequency of the station, you can tune in the station precisely. (Page 18)
  Scan tuning...Searching for a station automatically. (Page 20)

- Up to 162 frequencies can be memorized for Preset Station Tuning. You can edit them in any desired order. (Page 21)

  - Program Time can be memorized in the Preset Station, which enables the unit to choose the tuning frequency automatically depending on the time.
  - You can label the Preset Station with a Station Name.
  - AM mode can also be memorized.

- Several stations on the Tuning Page are already preset in this unit at the factory.

- Other features

  Clock display...You can select from local time or UTC (Universal Time Coordinated) time indication. (Page 9)
  5 sets of timer ...You can preset a desired station to be received at a desired time. (Page 27)
  Sleep timer...You can make the radio turn off automatically after 60, 30, or 15 minutes. (Page 26)
  Three different power sources...Internal batteries, house current, or car battery. (Page 8)

ATTENTION AU COMPOSANT AYANT RAPPORT À LA SÉCURITÉ!

LES COMPOSANTS IDENTIFIÉS PAR UNE MARQUE ⚠ SUR LES DIAGRAMMES SCHÉMATIQUES ET LA LISTE DES PIÈCES SONT CRITIQUES POUR LA SÉCURITÉ DE FONCTIONNEMENT. NE REMPLACER CES COMPOSANTS QUE PAR DES PIÈCES SONY DONT LES NUMÉROS SONT DONNÉS DANS CE MANUEL OU DANS LES SUPPLÉMENTS PUBLIÉS PAR SONY.

SECTION 1
SERVICING NOTES

TABLE OF CONTENTS

[Note on Repairing Microcomputer Board]

The user's program schedule data is memorized in E²PROM IC806.

When repairing by the microcomputer board replacement, unsolder IC806 on the user's board and solder it on the new board.

[Microcomputer Board Checking]

Checking the microcomputer board alone is possible.

1) Disconnect the flexible board from CN401 on the signal board.
2) Connect +6 V and ground to the points on the microcomputer board in the following figure.
3) Short-circuit between +3VCPU and OFF LOCK lands (OFF LOCK key ON state).
4) Short-circuit TST lands.
5) Pressing S806 ON/OFF key turns the microcomputer board on or off.
6) Release the shorted TST, +3VCPU, and OFF LOCK lands.

- **POWER SUPPLY**

[MICROCOMPUTOR BOARD]
– Component Side –

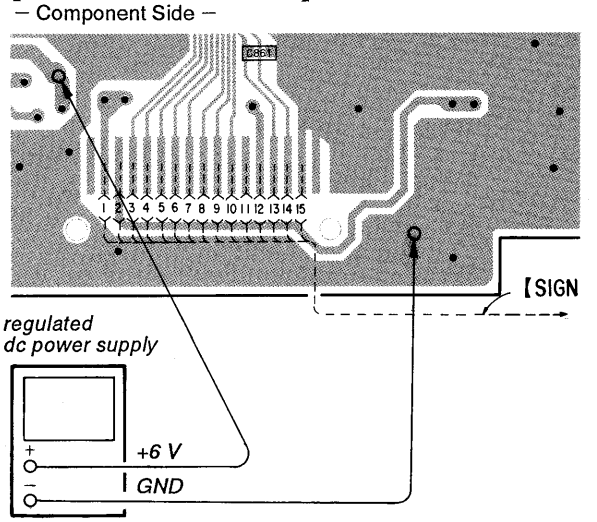

- **+3VCPU – OFF LOCK LANDS**

[MICROCOMPUTOR BOARD]
– Component Side –

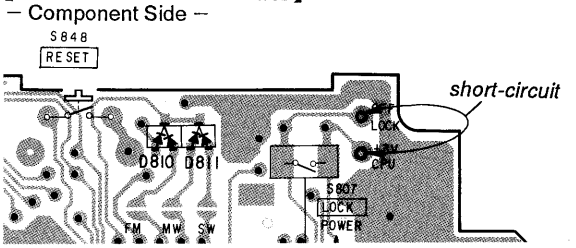

- **TST LANDS**

[MICROCOMPUTOR BOARD]
– Component Side –

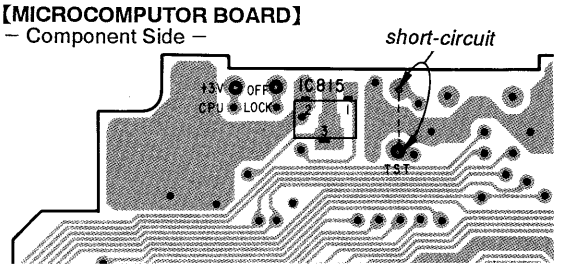

[LCD802 Replacing Procedure]

Perform in the order given.

1. Remove the microcomputer board and the key board the set.
2. Short-circuit between +3VCPU and OFF LOCK lands.
3. Short-circuit TST lands.
4. Connect lead wires for the power supply.
5. Confirm LCD 802 indication.
   a. Apply +6 V to the lead wire.
   b. Press S806 (ON/OFF key) ····· POWER ON
   c. Press S848 (RESET key) ····· RESET
   d. Press S846 (FM key) on the key board ····· FM
   e. While pressing S829 (METER BAND key), press S840 (PAGE FEED ⇧ key) ·· LCD all lights up

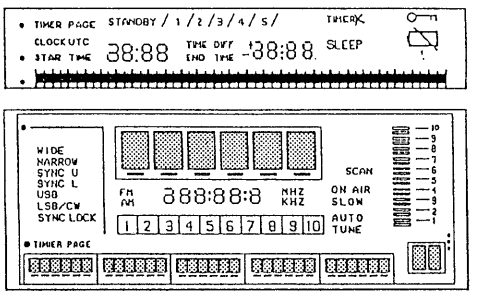

   f. Press S840 (PAGE FEED ⇧ key) ····· LCD half lights up

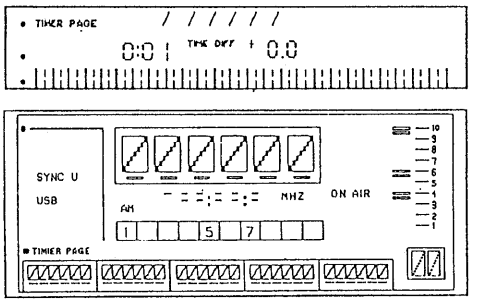

6. Confirm the LCD position by looking the hole on the left side of the LCD holder.

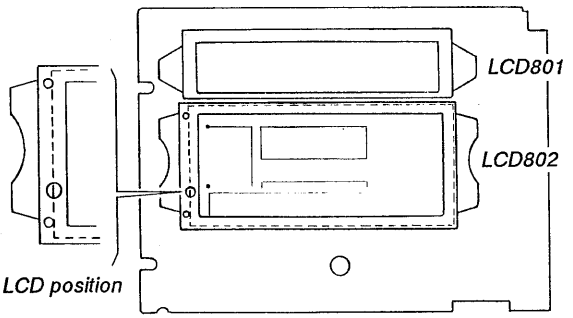

7. Remove LCD802 by loosening 6 twisted portion (★ mank) of the LCD holder.

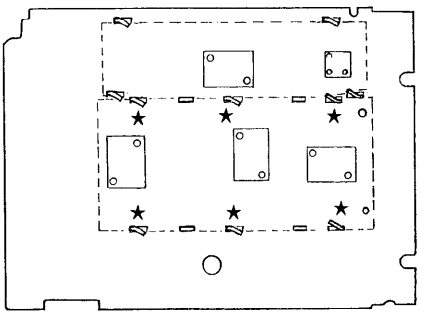

MICROCOMPUTER board

8. Place in the order, LCD holder, LCD, rubber connectors, light guide chip (B) in its position confirmed in the item 6.

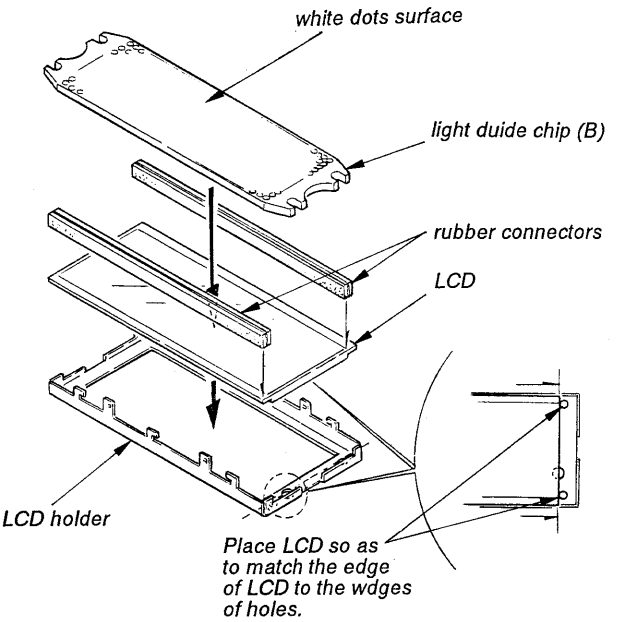

LCD and LCD holder positionings

9. Place the microcomputer board on LCD assembled in the item 8 and twist 6 portion for stopper of LCD holder.
10. Confirm LCD indication (Item 5 a to f).
11. When the indication goes out of order, repeat the items 7 to 10 again.

[Points of the Frequency Coverage Adjustment]

The soldering on the bridge patterns FM, MW, or SW on the microcompuetr board realizes to change the frequency coverage.

[MICROCOMPUTOR BOARD]

– Component Side –

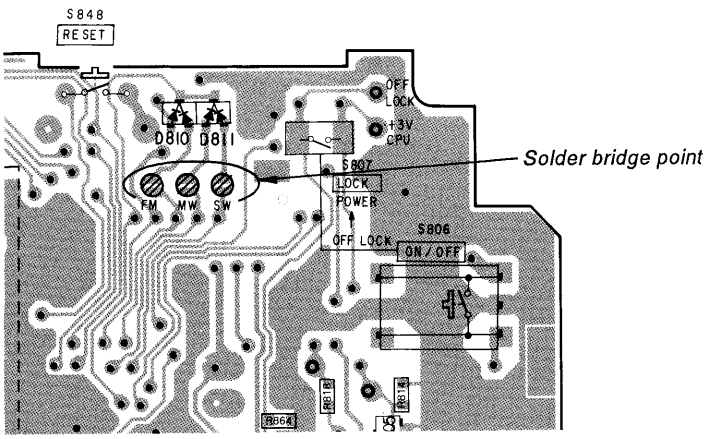

Type	Frequency Coverage				Solder bridge point		
	FM	LW	MW	SW	FM	MW	SW
1	76 – 108 MHz	150 →	→	29,999.9 kHz	OPEN	OPEN	OPEN
2	87.5 – 108 MHz	150 →	→	29,999.9 kHz	SHORT	OPEN	SHORT
3	87.5 – 108 MHz	150 → 285 kHz	531 →	26,100 kHz	SHORT	OPEN	SHORT
4	87.5 – 108 MHz	150 → 285 kHz	531 → 1,602 kHz	3,850 → 26,100 kHz	SHORT	SHORT	SHORT

Location and Function of Controls

Refer to the pages indicated in ● for details.

Front Panel

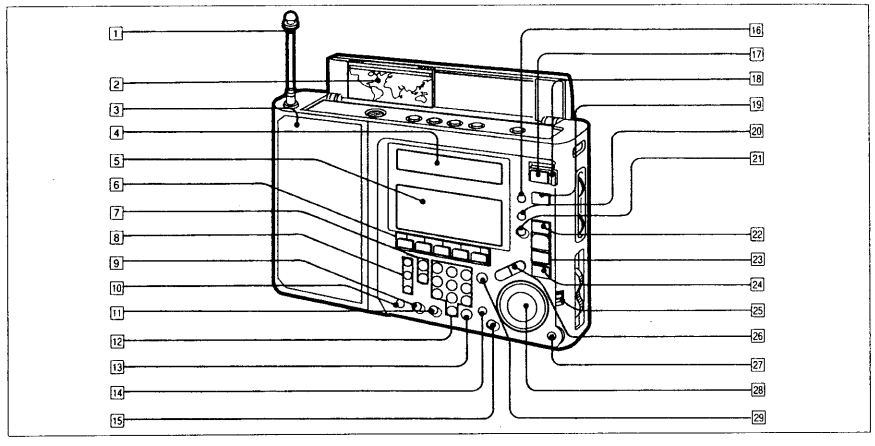

1 Telescopic antenna
2 World time scale ⑩
3 Speaker
4 Clock/timer display (for clock) ⑥
5 Frequency display (for radio) ⑥
6 S1, S2, S3, S4, S5 (station) buttons
7 Band selectors
FM button
AM button
8 MODE (AM mode) selectors ⑱
WIDE/NARROW button
SYNC button
SSB button
9 TIMER CHECK/ERASE button ㉔ ㉘
10 LIGHT button
Press to illuminate the display window for about 15 seconds.
11 ENTER button ㉑
12 DIRECT TUNE/TIME INPUT numeric buttons ⑯ ㉑
13 EXE (execute) button ⑯ ㉑
14 SCAN/AUTO TUNE button ⑳ ㉖
15 METER BAND button ⑳
16 KEY PROTECT button ⑪
17 ON/OFF (power) button
18 POWER/LOCK switch
Set this switch to POWER, then press the ON/OFF button to turn on the radio. Set the switch to LOCK when carrying the radio. When this switch is set to LOCK, the power will not be turned on even if you press the ON/OFF button.
19 SLEEP (sleep timer) button ㉖
20 TIMER STANDBY button ㉗
21 RESERVE button ㉗
22 TIMER PAGE button ⑭
23 PAGE FEED INS CHR/DEL CHR + ⌃/– ⌄ buttons ⑫ ㉒
Used for changing the Tuning Page or inserting or deleting characters of the Station Name.
24 QUICK PAGE button ⑬
25 DIAL LOCK switch ⑱
26 MEMORY FREQ/METER BAND/CURSOR ⇦ ⇨ buttons ⑯ ⑳ ㉒
27 AM FAST/SLOW selector ⑱
28 DIAL TUNE/JOG dial
29 EDIT button ㉑

What are the yellow and white dots marked beside the names of the buttons?
Some buttons or dials have more than one function. Yellow and/or white dots are marked beside the name of these buttons. For example, the TIMER CHECK/ERASE button has two functions. The function preceded by the yellow dot works only when the EDIT button (also marked by a yellow dot) is pressed. The function preceded by a white dot works only when the METER BAND button (also marked by a white dot) is pressed.

Top panel / Side panel

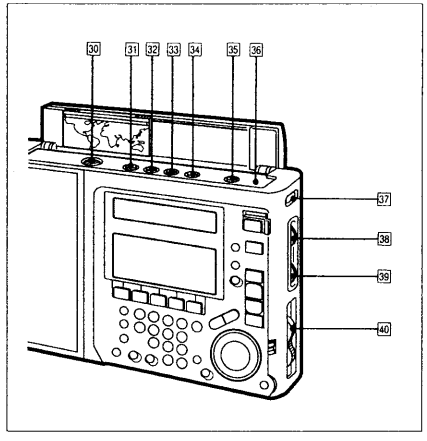

30 LCD CONTRAST dial ⑪
31 TIME SET LOCAL button ⑨
32 TIME SET TIME DIFF.(difference) button ⑨
33 TIME/PROGRAM selector
Each time you press this button, the clock/timer display changes between the current time and the Program Time (starting time and ending time) indications.
34 LOCAL/UTC selector ⑨
35 FREE button ㉓ ㉕
36 RESET button
Press this button when other buttons do not function.
37 Holes for the carrying belt
38 TREBLE control ⑪
39 BASS control ⑪
40 VOLUME control ⑪

How to use the stand

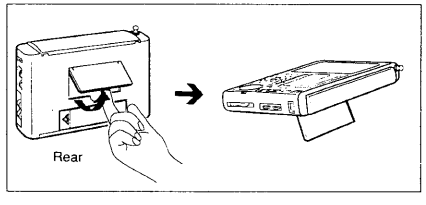

Rear panel

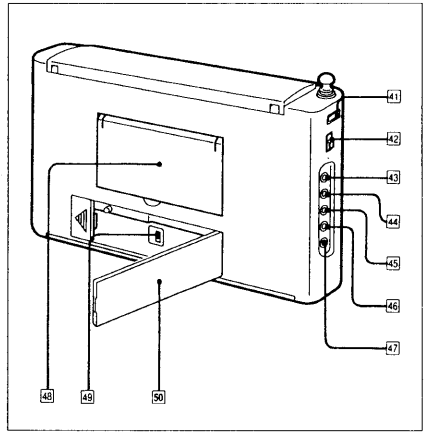

41 Holes for the carrying belt
42 SENS (sensitivity) selector
43 AM EXT ANT (external antenna) jack ㉙
44 TAPE REMOTE jack ㉚
45 TAPE LINE OUT jack ㉚
46 Ω (earphones) jack
47 DC IN 6V ⊖-⊂-⊕ (external power input) jack
48 Stand
49 9 kHz/10 kHz (MW channel step) selector (inside the battery compartment) ⑦
50 Battery compartment lid ⑧

How to attach the carrying belt

Attach the supplied carrying belt as illustrated below.

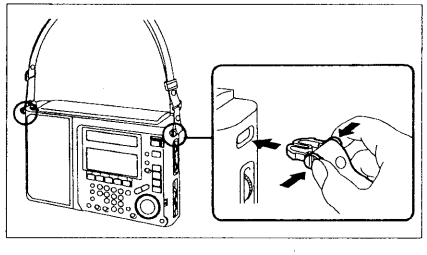

This section is extracted from instruction manual.

Clock/Timer Display

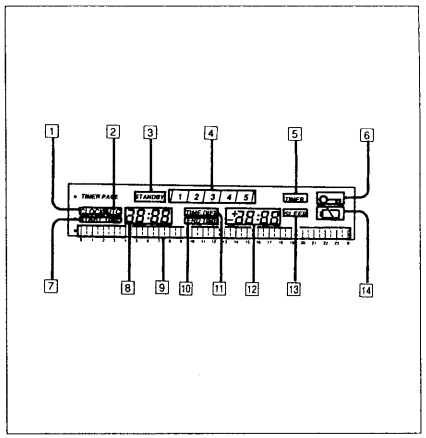

1 CLOCK indication
Flashes while setting the current time.
2 UTC indication
Appears when the current UTC (Universal Time Coordinated) time is shown.
3 STANDBY (timer standby) indication
Appears when the timer is reserved.
4 Timer numbers
Appears when each of the timers is reserved.
5 TIMER indication
Appears when the radio is activated by the timer.
6 Key protect indication
Appears when the keys are locked.
7 START TIME indication
Appears when the starting time of the timer or program time is shown.
8 Current local time/current UTC time/starting time
9 Program Time indicating bar
10 END TIME indication
Appears when the ending time of the timer or program time is shown.
11 TIME DIFF indication
Appears when the time difference is shown.
12 Time difference/ending time/remaining time for timer and sleep timer
13 SLEEP indication
Appears when the sleep timer is operating.
14 Battery empty indication

Frequency Display

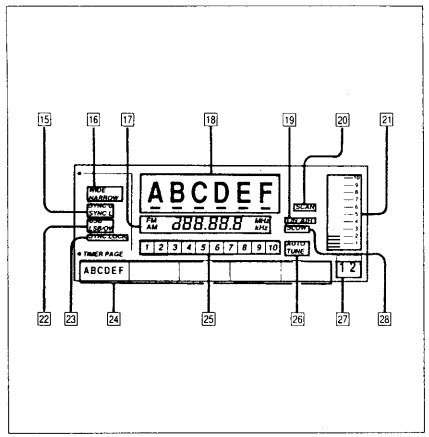

15 SYNC U/L (SYNC mode) indication
16 WIDE/NARROW (selectivity) indication
17 Band and frequency indication
18 Station Name area
19 ON AIR indication
Appears when you receive a station during its broadcasting time (Program Time).
20 SCAN indication
Appears during scan tuning.
21 SIGNAL METER (signal strength meter)
22 USB/LSB/CW (SSB mode) indication
23 SYNC LOCK indication
Appears when synchronous detection is performed.
24 Station selection line
25 Frequency numbers
26 AUTO TUNE indication
Appears when you set the Auto Tune function and during Auto Tune scan tuning.
27 Page number
28 SLOW indication
Appears when you select "SLOW" for the manual tuning interval (for AM).

How to Change the MW Channel Step

The MW channel step is factory-set to 9 (or 10) kHz to match the frequency allocation system of the country. If you use the radio where the frequency allocation system is based on a 10 (9) kHz interval, set the MW channel step selector in the battery compartment to 10 (9) kHz by following the procedure below.

1 Set POWER/LOCK to LOCK.
2 Open the battery compartment and take out the batteries.
3 Set the 9 kHz/10 kHz selector to the appropriate channel step.
4 Install the batteries and close the battery compartment.

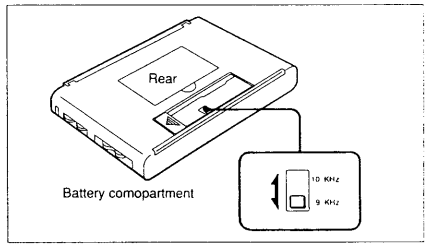

The frequency allocation of the area

Area	Frequency allocation system
North America, South America	10 kHz step
Other countries	9 kHz step

Note
You must change the MW channel step within 5 minutes. If more than 5 minutes elapses after the batteries are removed, the clock setting (page 9) and the data in the Quick Page (page 13) will be erased. In this case, set them again.

Power Sources

Batteries

Use four R14 (size C) batteries.

Battery installation

Note
Before installing the batteries, be sure to check that the MW channel step selector is set correctly. (See page 7.)

Install the batteries with correct polarity as illustrated below.

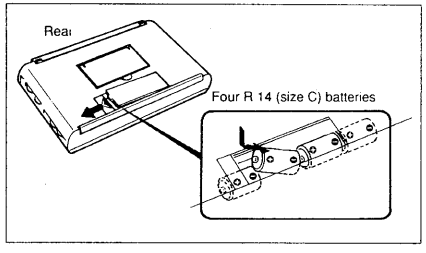

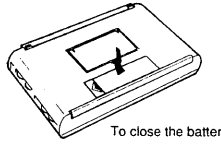

Notes on batteries

- This unit cannot be operated on the internal batteries when the AC power adaptor or car battery cord is connected to the DC IN 6V jack.
- Even when the unit is not to be used for a long period of time or is to be operated extensively on other power sources, keep the batteries installed to back up the clock and the built-in computer.

Battery replacement

- When the batteries are exhausted, the sound becomes weak or distorted, and the (battery empty) indication flashes on the clock/timer display. In this case, replace all the batteries with new ones.
  Even after you replace the batteries, remains flashing. To turn off , press ON/OFF.
- Replace the batteries within 5 minutes. Otherwise, the current time, the Quick Page settings, and the reservation for the timer will be erased. However, the data on the Tuning Pages and Timer Pages will not be erased.

House Current (except the models for Australia)

Use the supplied AC power adaptor.

Connect the AC power adaptor to DC IN 6V and the other end to a wall outlet as illustrated below.

Note (except the models for U.K.)
Before connecting the AC power adaptor, be sure to set the voltage of the adaptor to your local power line voltage with a screwdriver as illustrated.

For customers supplied with an AC plug adaptor
Use the AC plug adaptor if the AC power adaptor does not match the outlet.

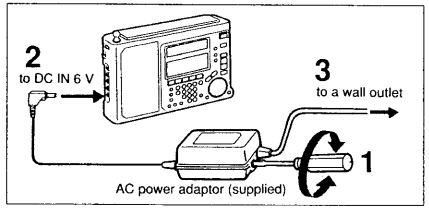

Note on the AC power adaptor

Use only the supplied AC power adaptor (except the models for Australia). Do not use any other AC power adaptor.

Polarity of the plug

12 V car battery

Use the Sony DCC-E160L car battery cord (not supplied).

Connect the car battery cord to DC IN 6 V and the other end to a cigarette lighter socket of the car as illustrated below.

Note
When the AC power adaptor or car battery cord is connected to the DC IN 6 V jack, the internal batteries (if present) are automatically disconnected.

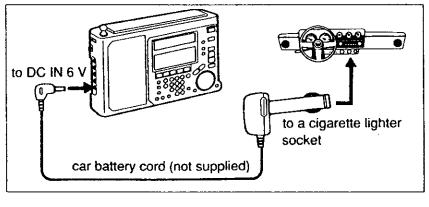

Setting the Clock

This unit is factory-set with the data for Preset Station Tuning which includes time data (page 15). For tuning in correctly, you need to set the correct local time and correct time difference from the UTC (Universal Time Coordinated) time.

Before setting the clock, check the time difference between the local time in your area and the UTC time by referring to the table on the next page.

How to Set the Clock

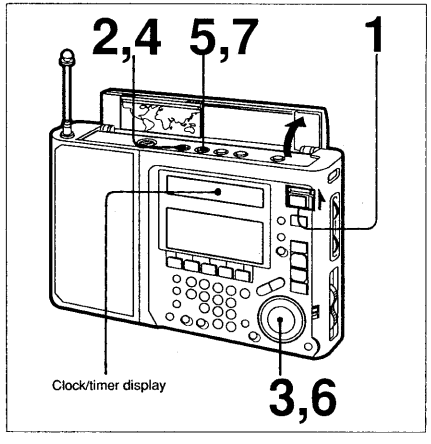

1 Set POWER/LOCK to POWER.
2 Press and hold LOCAL.
  The CLOCK indication flashes.

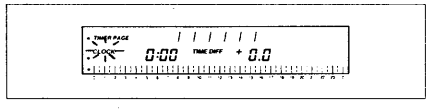

3 Turn the DIAL TUNE/JOG dial to adjust the current local time while CLOCK is flashing.
4 Release LOCAL.
5 Press and hold TIME DIFF.
  The TIME DIFF. indication flashes.

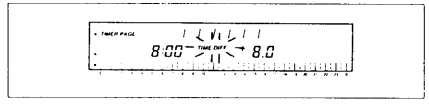

6 Turn the DIAL TUNE/JOG dial to adjust the time difference* while TIME DIFF. is flashing.
7 Release TIME DIFF.

Zero second adjustment

If you want to adjust the time exactly to the second with a telephone time signal, proceed as in the following example.
Example: To set to 15:15
1. Adjust the time indication to 15:15 and keep LOCAL depressed.
2. Release LOCAL simultaneously with the telephone time signal. The clock begins to show the precise time.

Notes on the time indication

- Each time you press the UTC/LOCAL button, the current time indication changes between the UTC time and the local time.
- You cannot set the clock by adjusting the UTC time.
- Each time you press the TIME/PROGRAM button, the clock/timer display changes between the current time and Program Time (starting time and ending time) indications.

Difference between local time and UTC (universal time coordinated) time

The table below shows the difference between the local time and the UTC time in each area. The differences marked with a plus sign (+) indicate the number of hours ahead of the UTC. The differences marked with a minus sign (–) indicate the number of hours behind the UTC. If there is no difference between the local time and the UTC, "+0.0" is indicated.
To see the time difference during the period for daylight saving time or "Summer Time" (if necessary), add one hour to the difference indicated in the table.

Area	Time difference
Australia	
(Sydney)	+10
(Darwin)	+9 1/2
(Perth)	+8
Austria	+1
Belgium	+1
Brazil	
(Manaos)	–4
(Rio de Janeiro)	–3
Canada	
(Vancouver)	–8
(Calgary)	–7
(Montreal)	–5
Canary Isl.	UTC (+0)
Chile	–4
China (P.R.)	
(Beijing)	+8
Denmark	+1
Ecuador	–5
Egypt	+2
Fiji	+12
Finland	+2
France	+1
Germany	+1
Greece	+2
Hawaii	–10
Hong Kong	+8
India	+5 1/2
Indonesia	
(Jakarta)	+7
Iran	+3 1/2
Italy	+1
Japan	+9
Kenya	+3
Korea (D.P.R.)	+9
Malaysia	+8
Mexico	
(Mexico City)	–6
(Tijuana)	–8
Netherlands	+1
New Zealand	+12
Norway	+1
Pakistan	+5
Panama	–5
Peru	–5
Philippines	+8
Poland	+1
Portugal	UTC (+0)
Saudi Arabia	+3
Singapore	+8
Spain	+1
Sri Lanka	+5 1/2
Sweden	+1
Switzerland	+1
Taiwan	+8
Thailand	+7
United Kingdom	UTC (+0)
USA	
(New York)	–5
(Dallas)	–6
(Denver)	–7
(Los Angeles)	–8
(Anchorage)	–9
USSR	
(Moscow)	+3

***Notes on the time difference from the UTC time**

- The UTC (Universal Time Coordinated) time is set according to the time difference and the current local time. Always adjust the local time first and then the time difference. Do not adjust the time difference before adjusting the local time.
- The local time will not change by adjusting the time difference. When you move from one place to another, or when your area enters summer time period, adjust the local time, not the time difference. This way, the time difference will be adjusted automatically.
- The UTC time, local time, and the time difference are related to each other as follows:
  (Time difference) = (Local time) – (UTC time)

How to use the world time scale

You can check the local time of a desired area by using the world time scale.

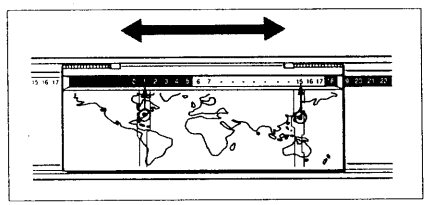

Example:
To check the local time in New York when you are in Tokyo
1 Check the current local time in the area you are in. (e.g. 15:00 in Tokyo)
2 Move the scale so that the current time is above the area you are in.
3 Look for the area where you want to know the time. The number above the area shows its local time.

Tips for Better Reception

Volume and Tone Control

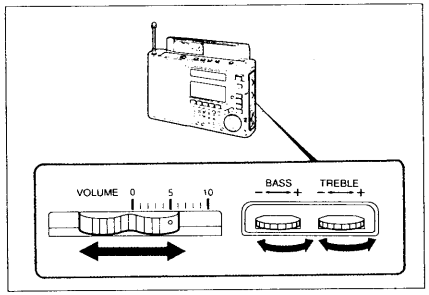

Adjust the volume with the VOLUME control, and the bass and treble with the BASS and TREBLE controls.

Adjusting the Display Contrast

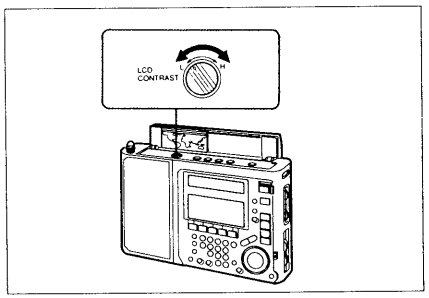

Turn the LCD CONTRAST dial.
For weak contrast, turn towards L.
For sharp contrast, turn towards H.
You can adjust the contrast of the Station Name area, Station selection line, and the Page number display.

Key Protection

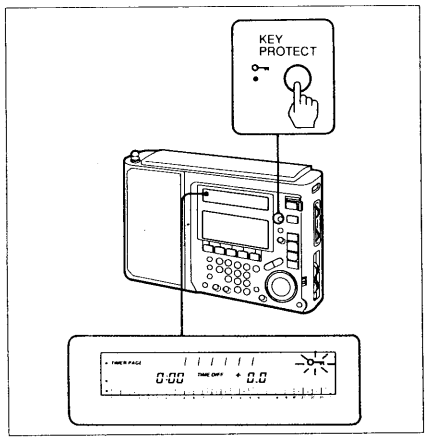

Press KEY PROTECT 🔑 .
🔑 appears on the clock/timer display. While it is displayed, all the buttons and dial are locked.
This prevents accidental change of the received station.

To release the key protection, press KEY PROTECT 🔑 again.

Preset Station Tuning

Once the frequencies of the stations has been saved, you can tune in these stations easily by using Preset Station Tuning. The saved station can be tuned in by selecting the "Station Name" on each "Preset Page." Each Preset Page can hold up to 5 Stations Names.
There are three kinds of "Preset Pages" in Preset Station Tuning:
- Tuning Pages (1 to 20)
- Quick Pages (Q1 and Q2)
- Timer Page (TP)

How to Tune in by Selecting a Preset Station Name

The **Tuning Pages (1 to 20)** can hold up to 20 Pages, with 5 Station Names on each Page, therefore 100 Station Names in total. One Station Name can hold up to 10 "Frequencies" (see page 15), but in total, 162 Frequencies can be memorized on the Tuning Pages. When you select a Station Name, one of the 10 "Frequencies" is tuned in. The Station Names are displayed in capital letters; e.g. "ABC".

The **Quick Pages (Q1 and Q2)** can hold 2 Pages, with 5 Station Names or 5 frequency numbers on each Page, therefore 10 stations in total.
Quick Pages appear to be very similar to Tuning Pages, but since there are only 2 Pages, you can tune in a station more quickly. Quick Page can memorize a Station Name that you saved on the Tuning Page or any frequency that you tune in. Another difference is that the stations on Quick Pages are memorized by overwriting onto the previously memorized station. (See page 23 for details.) Quick Page is also suitable for temporary use, as a memorandum of a frequency number. The Station Names are displayed in small letters; e.g. "abc."

The **Timer Page (TP)** has one Page, therefore 5 Station Names in total. Each Station Name on the Timer Page has only 1 "Frequency." Timer Page can be used to memorize stations for timer operation (turning on and off of the radio at a specified time). The Station Names are displayed in capital letters; e.g. "ABC".

Several stations on the Tuning Page are already preset in this unit at the factory. Therefore, you can tune in a Preset Station by following the instructions on the right before memorizing stations of your own choice. To memorize the stations, go on to the next section to learn how to tune in a station by direct, manual or scan tuning and read the section "Memorizing and Editing Stations" section from page 21.

Notes
- The stations on the Quick Page and the Timer Page are not preset at the factory. Read the section from page 21 and save the stations you want for more details.
- Refer to the supplied "Wave Handbook" for details about the factory-preset stations.

To receive a preset station on a Tuning Page

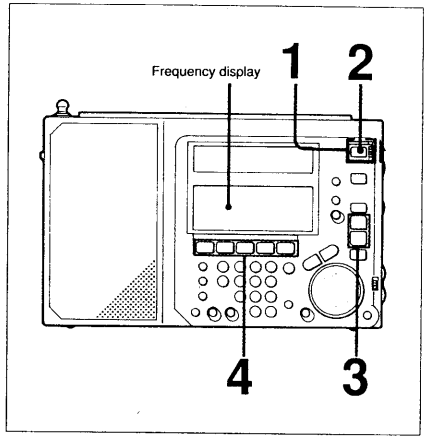

1 Set POWER/LOCK to POWER.
2 Press ON/OFF.
The indications on the frequency display appear.
3 Press PAGE FEED + ⇧ or – ⇩ to select the desired Page number (from 1 to 20)*.
Each time you press + or –, the page number changes.

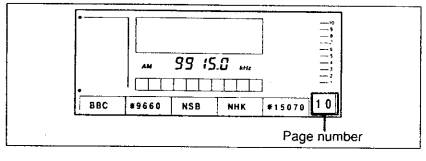

4 Select the the desired station from the 5 Station Names on the Station selection line, and press the Station Number button (S1, S2, S3, S4, or S5) for that Station Name.

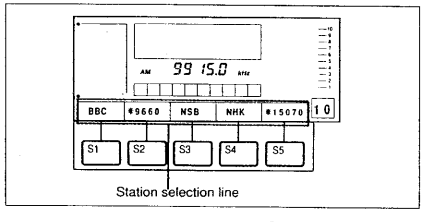

The selected station is tuned in and the Station Name appears on the display.
To select a Frequency, refer to page 15.

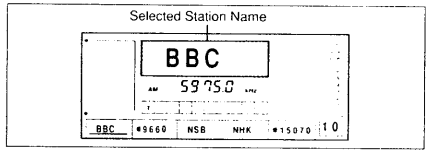

*Note on the Page number

When you memorize Station Names on all the 20 Tuning Pages, all the Page numbers are shown when you press the PAGE FEED buttons. Otherwise, not all the Tuning Pages are displayed.
The Page that has no Station Names is called a "Blank Page." When you select from the Tuning Pages, only the numbers for Pages with preset stations and one "Blank Page" number (with the smallest Page number) is displayed. The other Blank pages will not be displayed.
Only the first "Blank Page" number is displayed so that you can save a new Station Name on that page.

Example: When Pages 1 to 10 are "Blank Pages" and Pages 11 to 20 have Preset Station Names, only Page Numbers 1 and 11 to 20 are displayed when you press the PAGE FEED buttons.

However, during the Program Time Mode when memorizing stations (see page 22), all the 20 Pages are displayed when you press the PAGE FEED buttons.

To receive a preset station on a Quick Page

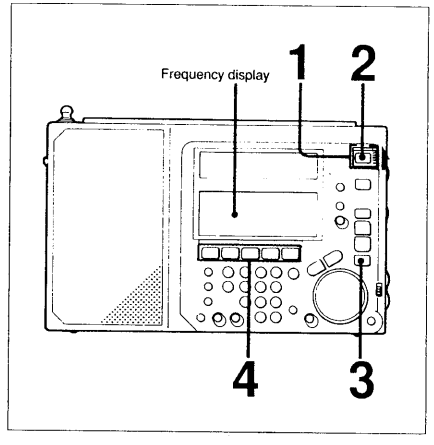

1 Set POWER/LOCK to POWER.
2 Press ON/OFF.
The indications on the frequency display appear.
3 Press QUICK PAGE to select the desired Quick Page, Q1 or Q2.
Each time you press it, the Page number changes as follows:
Q1 → Q2 → Tuning Page

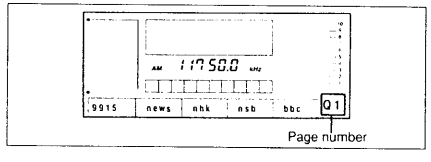

4 Select the the desired station from the 5 Station Names (or frequencies) on the Station selection line, and press the Station Number button (S1, S2, S3, S4, or S5) for that station.

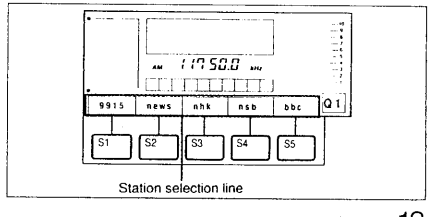

The selected station is tuned in.
The Station Name appears if it has one. (See page 23 for details.)

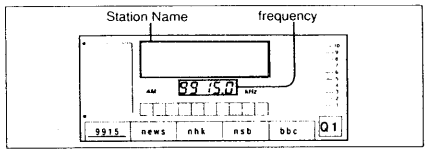

Note
When the unit is shipped from the factory or when you remove the batteries for a long time, the settings for the Quick Page are erased .

To receive a preset station on the Timer Page

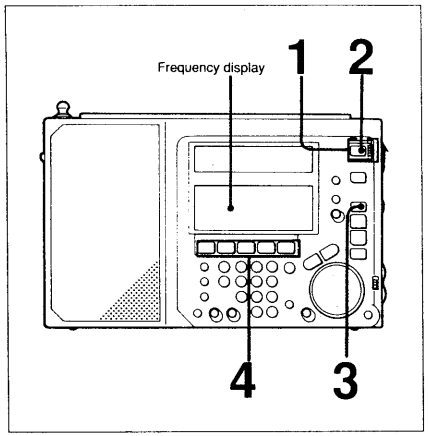

1 Set POWER/LOCK to POWER.
2 Press ON/OFF.
The indications on the frequency display appear.
3 Press TIMER PAGE so that "TP" appears for the Page number.

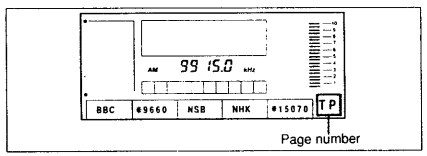

4 Select the the desired station from the 5 Station Names on the Station selection line, and press the Station Number button (S1, S2, S3, S4, or S5) for that Station Name.

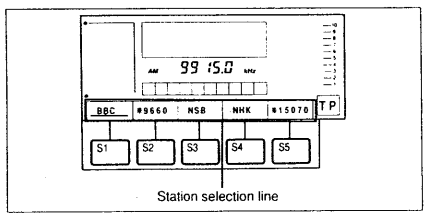

The selected station is tuned in and the Station Name appears on the display.

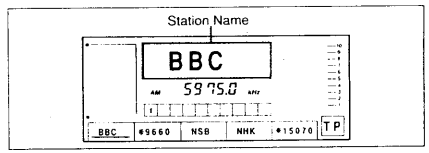

Note
When this unit is shipped from the factory, the Timer Page is not preset with Station Names. Refer to page 21 for memorizing stations.

How to Select a Preset Frequency under a single Station Name

Another important characteristic of the Preset Station Tuning is that you can save up to 10 kinds of "Frequencies" under one Station Name. Each "Frequency" can hold the following types of data:
- band and frequency of the broadcast
- AM detection mode
- Program Time (broadcasting time or any desired time).

Note
The Timer Page can hold only one Frequency.

Memorizing **Program Time** for each Frequency enables the following:
- The "ON AIR" indication (page 16) tells you whether it is the broadcasting time for the station or the program.
- The unit automatically selects the most appropriate station to tune in among the 10 Frequencies.

Saving two or more Frequencies with different Program Times under one Station Name is useful especially for SW reception. The receiving condition of SW broadcast varies depending on the season, time, and frequency. The same programs are broadcasted at the same time using different frequencies so that the listeners can choose the frequency with the best receiving condition. The "best" frequency varies depending on the area and the time.

For example, NSB has two frequencies; 3925 kHz, and 6055 kHz. Let's suppose that in a certain area, 3925 kHz is received clearly in the morning, but in the afternoon, 6055 kHz is received better. In this case, you can memorize two "Frequencies" with different Program Times and frequencies in one "Station Name."

You can program each Frequency with starting time and ending time. However, you cannot turn the power of the radio on and off by programming this time duration unless that Station is on the TIMER PAGE and you set the timer (page 27).

Since you can label the Station Name with any name, you can save 10 different stations of the same category and name them "MUSIC", for example. This way, you can find a station more quickly if you know what type of broadcast you want to listen to.

To select a "Frequency"

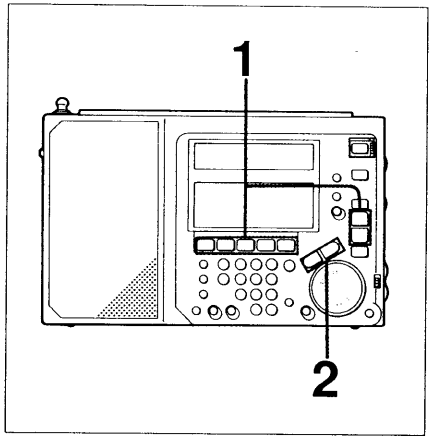

1 Receive a preset station by selecting a Station Name (see page 12).

If a Station Name holds two or more "Frequencies", all the Frequency numbers appear for one second when you select that Station Name. Then the appropriate "Frequency"* is selected automatically and only one Frequency number remains.

2 If the desired "Frequency" number is not selected, press MEMORY FREQ/METER BAND STEP/CURSOR ⇦ ⇨ to select the desired Frequency.

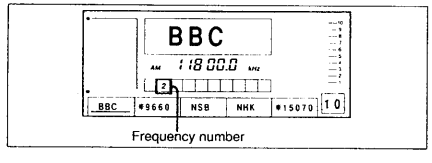

*How the appropriate Frequency is selected
The unit automatically selects one Frequency if there are two or more Frequencies in one Station Name.
If the current time is within the Program Time of one Frequency, that Frequency is selected and the "ON AIR" indication appears. If the current time is not within the Program Time of any Frequencies, the Frequency to be selected is one of the following:
- the Frequency whose Program Time is the nearest to the current time (if "Program Time" is memorized in all the Frequencies under that Station Name)
- the Frequency which was selected the last time (if there is a Frequency without Program Time).

Note
If you want the unit to select the Frequency according to its Program Time, make sure that the clock is set correctly.

Direct Tuning

If you know the frequency of a station to be received, you can tune in the station easily by direct tuning.

How to Tune In a Station Directly

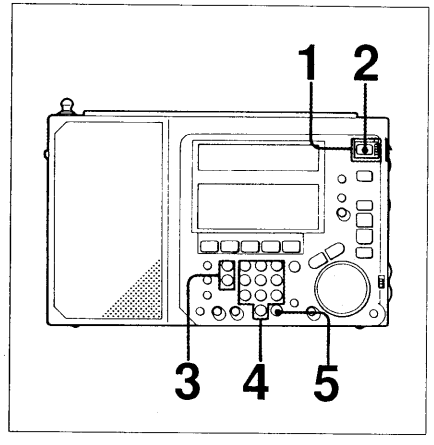

1 Set POWER/LOCK to POWER.
2 Press ON/OFF.
The indications on the frequency display appear.
3 Select the desired band by pressing FM or AM.
For AM (SW, MW, or LW) reception, select the required AM mode (See page 18.)
4 Input the frequency of the desired station by pressing DIRECT TUNE/TIME INPUT numeric buttons.
5 Press EXE.

How to input a frequency

Example 1: AM 1,242 kHz
Press

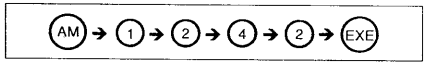

Frequency display

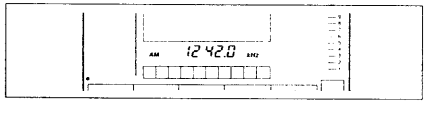

Example 2: FM 92.5 MHz
Press

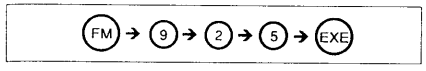

Frequency display

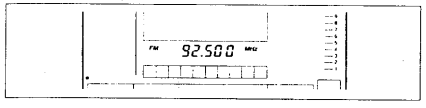

To input a frequency whose right-hand digits are all 0
Example 3: AM 2,000 kHz

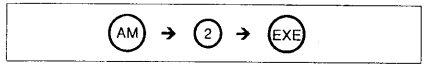

Frequency display

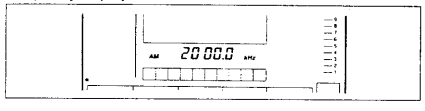

Example 4: FM 90.00 MHz

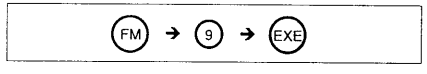

Frequency display

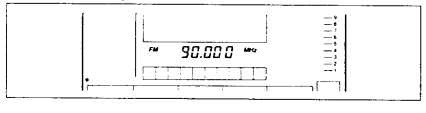

In case of 10,000 kHz and 20,000 kHz, however, press "1", "0", "EXE", and "2", "0", "EXE", respectively.
In case of 200 kHz, 300 kHz, ... 900 kHz, press "2", "0", "0", "EXE"; "3", "0", "0", "EXE", etc.
- After pressing a key, press the next key within 10 seconds. If you do not, the previous station returns.
- With direct tuning, the frequency is displayed in increments of the following intervals, depending on the bands:
  AM: 1 kHz
  FM: 0.05 MHz

If you input a frequency between intervals, the frequency at the interval just below is tuned in and displayed. For example, if you input FM 92.540 MHz, FM 92.500 MHz is tuned in and displayed.

If the "TRY AGAIN" indication appears
If you input a frequency outside the frequency range, "TRY AGAIN" appears on the display three times. Then the frequency indication goes back to the previously received frequency.

To Improve Receiving Conditions

Adjust the antenna as illustrated.

For FM reception
Pull out the telescopic antenna to expose its swivel base and adjust its length, angle and direction.

For SW reception
Pull out the telescopic antenna to its full length and set it vertically.
Note: If there is a fluorescent lamp just above the radio and the reception is noisy, incline and shorten the telescopic antenna.

For MW/LW reception
Retract the telescopic antenna. The built-in ferrite bar antenna activates. Since this antenna is directional, rotate the unit horizontally for optimum direction.

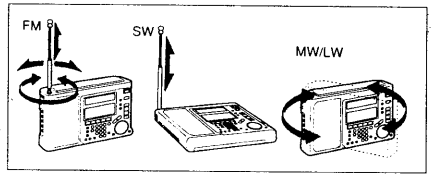

Notes
- If reception is unsatisfactory with the telescopic antenna or the built-in ferrite bar antenna, connect an external antenna. See page 29 for the details.
- In vehicles or buildings, radio reception may be difficult or noisy. Try listening near the window.
- If the received sound is distorted or noisy, adjust the antenna carefully. For AM reception, set the SENS switch to LOCAL.

Manual Tuning

Use manual tuning when you do not know the frequency of the station you want to tune in, or when you want to tune in a station more precisely after scan tuning (page 20).

How to Tune In a Station Manually

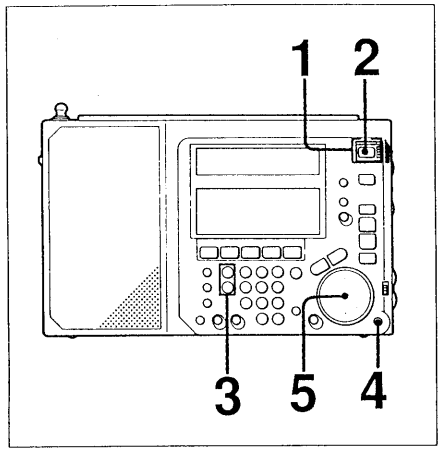

1 Set POWER/LOCK to POWER.
2 Press ON/OFF.
The indications on the frequency display appear.
3 Select the desired band by pressing FM or AM.
For AM (SW, MW, or LW) reception, select the required AM mode (See the next section.)
4 For AM reception, select the tuning interval (fast or slow) by pressing FAST/SLOW.
Each time you press it, the tuning interval changes alternately.
FAST (no indication): 1 kHz ↔ SLOW: 50 Hz

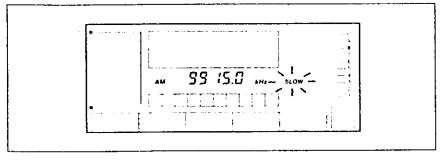

5 Turn the DIAL TUNE/JOG dial to tune in a desired station. Turn the dial clockwise for higher frequencies and counter-clockwise for lower frequencies.

Note
When you select "SLOW", the tuning interval will be 50 Hz, but the frequency is displayed in 100 Hz step.

Notes:
- When the upper or lower limit of the band frequency (FM or AM) is reached, the frequency no longer changes even if you turn the DIAL TUNE/JOG dial further.
- For AM (LW, MW, and SW) reception in SYNC U,SYNC L, USB, or LSB/CW, be sure to set the tuning interval to SLOW and turn the DIAL TUNE/JOG dial slowly.
- When the DIAL LOCK switch is set to the direction of the arrow, you cannot change the frequency by turning DIAL TUNE/JOG.

How to Select the AM Mode

Select the appropriate AM mode according to the broadcast receiving conditions.

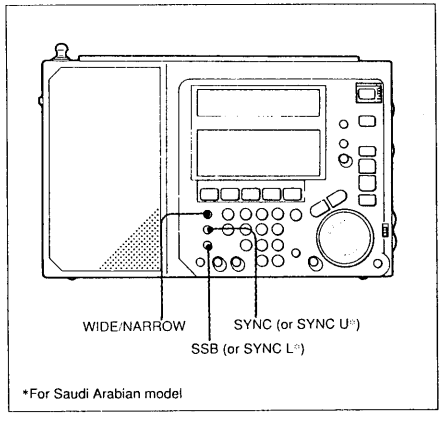

*For Saudi Arabian model

Press the MODE buttons.
Saudi Arabian model: WIDE/NARROW, SYNC U, and SYNC L.
Models for other countries: WIDE/NARROW, SYNC, and SSB.
The selected AM mode appears on the frequency display.

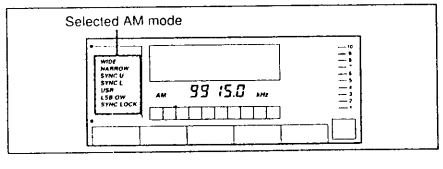

To change the selectivity

Press WIDE/NARROW and display WIDE or NARROW.
WIDE: Normally set to this mode for wider selectivity.
NARROW: If reception is interrupted or noisy, set to this mode for narrower selectivity. Reception will be improved.

To activate the synchronous detection*1

Press SYNC and display SYNC U or SYNC L.
Select either SYNC U or SYNC L which best reduces signal interference or distortion due to fading*2.

If neither of the two is effective or if the sound gets worse, press SYNC again to cancel this mode. The SYNC indication disappears.

When you select SYNC U or SYNC L
The SYNC LOCK indication appears on the display. If this indication does not appear, it shows that the synchronous detection cannot be performed because the signal is too weak.

To activate the SSB (Single Side Band) mode

Press SSB and display USB or LSB/CW.
USB: For USB (Upper Side Band) reception.
LSB/CW: For LSB (Lower Side Band) or CW (International Morse Code) reception.

About SSB (Single Side Band) and CW (Continuous Wave)
SSB is very popular among ham and business radio and will be found on all of the amateur bands because of its signal intelligibility. This results from that it transmits signals with half bandwidth of DSB (Double Side Band).
In general, SSB transmissions up to 10 MHz employs LSB modulation, and those above this frequency uses USB.
CW is also popular among ham and business radio. In CW transmission, the amplitude of a carrier is not modulated while that of other system is modulated. CW conveys information by interrupting a carrier using Morse code. It can be heard as a beat sound only with the unit equipped with the BFO circuits. To understand the information transmitted by CW, you need to learn the Morse code.

*1 **Synchronous detection** extracts one side band free from interference out of the DSB signals. The circuit takes the carrier wave out of the signals, and provides them with the synthesized signal of exactly the same frequency and phase.

*2 **Fading** is a phenomenon in which the sound gets louder and lower in turn. It occurs because the signal from the station arrives by two or more different paths.

What is synchronous detection?

There are two big problems in AM reception: distortion due to fading and interference from adjacent stations. The synchronous detection is effective in solving these problems. Distortion due to fading is caused by over-modulation, which occurs when a carrier component of the received signal is attenuated on the way. In this receiver, a pure carrier frequency with no level variation, perfectly synchronized with the original carrier, is generated in the synchronous detector circuit and is mixed with the received signal to compensate the attenuated carrier component. In this way, distortion is remarkably reduced.
On the other hand, AM (LW, MW, and SW) broadcasting generally uses double-sideband transmission, in which modulated signals are transmitted using both the upper and lower sidebands (USB and LSB). In most cases, one of the sidebands is affected by interference from adjacent stations (beats). In the synchronous detector circuit, one of USB and LSB can be received. This allows clear reception without interference from adjacent stations.

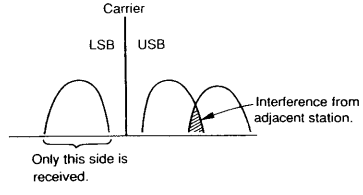

Scan Tuning

Use scan tuning to automatically scan the stations in the frequency range of a broadcast band.

How to Scan the Stations

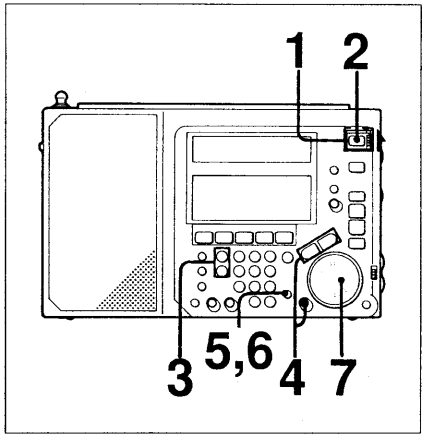

1 Set POWER/LOCK to POWER.
2 Press ON/OFF.
The indications on the frequency display appear.
3 Select the desired band by pressing FM or AM.
4 While keeping METER BAND depressed, press MEMORY FREQ/METER BAND STEP/CURSOR ⇦ ⇨ and select the meter band. (Refer to the table on the right.)

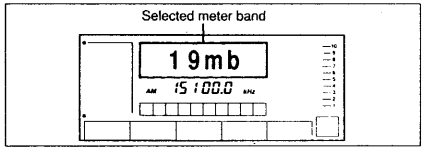

5 Press SCAN/AUTO TUNE.
"SCAN" indication appears.
Within the frequency range of the selected meter band, scan tuning begins and stops automatically for 2 seconds each time a station is received.

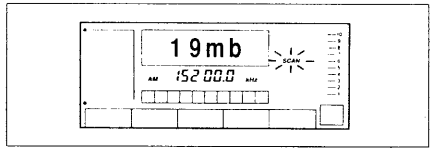

6 Press SCAN/AUTO TUNE again when the desired station is tuned in.
7 Tune in more precisely with the DIAL TUNE/JOG dial if necessary.

The frequency range and tuning interval of each broadcast band

Broadcast band	Meter band (display)	Frequency to be scanned	Scanning intervals
LW	LW	150 – 285 kHz (For Italy and Saudi Arabia) 150 – 528 kHz (For other countries)	3 kHz
MW	MW	531 – 1,602 kHz or 540 – 1,600 kHz*1	9 kHz or 10 kHz*1
SW1*2	120 mb	2,300 – 2495 kHz	5 kHz
SW2*2	90 mb	3,200 – 3,400 kHz	5 kHz
SW3	75 mb	3,900 – 4,000 kHz	5 kHz
SW4	60 mb	4,750 – 5,060 kHz	5 kHz
SW5	49 mb	5,950 – 6,200 kHz	5 kHz
SW6	41 mb	7,100 – 7,300 kHz	5 kHz
SW7	31 mb	9,500 – 9,900 kHz	5 kHz
SW8	25 mb	11,650 – 12,050 kHz	5 kHz
SW9	21 mb	13,600 – 13,800 kHz	5 kHz
SW10	19 mb	15,100 – 15,600 kHz	5 kHz
SW11	16 mb	17,550 – 17,900 kHz	5 kHz
SW12	13 mb	21,450 – 21,850 kHz	5 kHz
SW13	11 mb	25,670 – 26,100 kHz	5 kHz
FM	FM	87.5 – 108.0 MHz (For Germany, Italy, Scandinavian countries, Austria and Saudi Arabia) 76.0 – 108 MHz (For other countries)	50 kHz

*1 9 kHz or 10 kHz depending on the MW channel step setting (see page 7.)
*2 Except for Italian models

When scanning stops too often
Set SENS to LOCAL.

Memorizing and Editing Stations

This section describes how to save stations and "edit" (add, erase, or program) them for Preset Station Tuning. Several stations on the Tuning Page are already memorized when this unit was shipped from the factory. To see the difference among Tuning Page, Quick Page, and Timer Page, and for more details, refer to the "Preset Station Tuning" section (page 12.)

How to Memorize a Station on the Tuning Page and the Timer Page

You can save some or all of the following data under a Preset Station on the Tuning and the Timer Page:
- Station Name
- band and frequency of the broadcast
- AM detection mode
- Program Time (starting time and ending time)

If you do not want to program some kinds of the above data, skip the procedures as indicated in the instructions.

Notes on the Timer Page:
- The preset stations memorized on the Timer Page can be used as the programs for timer operation (see page 27.)
- The Program Time for the Timer Page is up to 120 minutes.

To memorize a Station

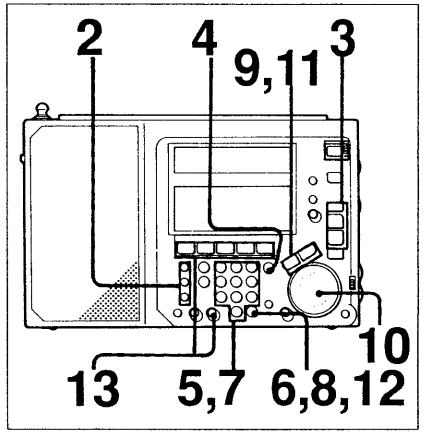

1 Tune in the desired station using manual, direct, or scan tuning. (See pages 16, 18, 20.)
2 For AM, select the desired AM mode. (See page 18.)

3 Select the desired Page to be memorized.
For Tuning Pages, press PAGE FEED + ⇧ or – ⇩ and display the desired Page number.
For Timer Page, press TIMER PAGE and display "TP."

If you do not want to program the Program Time nor the Station Name, go to step 13.

4 Press EDIT.
"START TIME" on the clock/timer display flashes. (The system enters the Program Time Mode.)

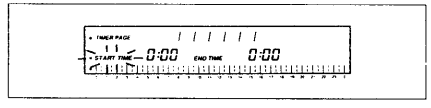

If you do not want to program the Program Time, go to step 9.

5 Input the starting time* by pressing the DIRECT TUNE/TIME INPUT numeric buttons.

Example: To input "12:00".
Press "1," "2", "0", "0".

6 Press EXE.
"END TIME" flashes.

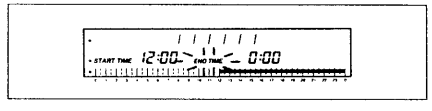

7 Input the ending time* by pressing the DIRECT TUNE/TIME INPUT numeric buttons.

Example: To input "15:00"
Press "1", "5", "0", "0".

8 Press EXE.
"START TIME" flashes again.
The Program Time duration is indicated by the Program Time Bar.

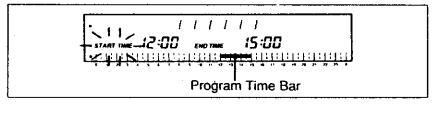

If you do not want to program the Station Name, go to step 13.

9 Press MEMORY FREQ/METER BAND STEP/CURSOR ⇦ or ⇨ button.
A cursor appears under one letter of the Station Name on the frequency display. (The unit enters the Station Name Editing Mode.)

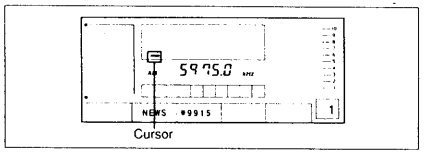

10 Turn the DIAL TUNE/JOG dial to select the desired character for the first letter of the Station Name.
11 Press MEMORY FREQ/METER BAND STEP/CURSOR ⇨ button.
The cursor moves to the next letter.

Repeat steps 10 and 11 to make the desired Station Name.

12 Press EXE.
13 While keeping ENTER depressed, press the desired station number; S1, S2, S3, S4, or S5.

The memorized Station Name appears above the memorized station number on the Station Selection Line on the Frequency display.

(The unit goes back to the Tuning Mode.)

Example
The display will look like the illustration below if you have programmed the following data:
frequency: AM, 5975.0 kHz
starting time: 12:00
ending time: 15:00
AM mode: Wide
Station Name: BBC
Page and number: Tuning Page 1, Station number S1

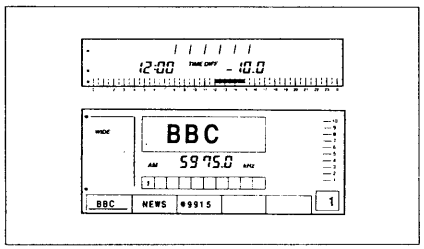

About the starting time and ending time
- Input either the local time or the UTC time depending on the clock indication. If the UTC indication is displayed, input the UTC time, and if not, input the local time. Once the Program Time is memorized, if you change the clock indication by pressing LOCAL/UTC, the Program Time indication and Program Time bar changes also according to the time difference.
- You do not have to input a "0" for time such as "0:10". Just input "1" and "0".

About the Program Time Mode, the Station Name Editing Mode, and the Tuning Mode
This unit has three modes: Program Time Mode, Station Name Editing Mode, and Tuning Mode.
In the Program Time Mode, you can input the starting and ending time.
In the Station Name Editing Mode, you can make a Station Name.
The Tuning Mode is the normal state in which you can tune in a station.
When you press ENTER and S1-S5 and memorize a Station or a Frequency, the unit goes back to the Tuning Mode.

To exit the Program Time Mode or Station Name Editing Mode and go back to the Tuning Mode, press FM, AM, or S1-S5.
To exit the Station Name Editing Mode and go back to the Program Time Mode, press EXE.

How to make a Station Name

You can use up to 6 characters to make a Station Name. The letters and symbols you can use are the following (53 kinds of characters and a blank space):

	A	B	C	D	E	F	G	H	I	J	K	L	M
?	@	:	;	=	_	%	&	'	(	)	*	+	,

N	O	P	Q	R	S	T	U	V	W	X	Y	Z
-	.	/	0	1	2	3	4	5	6	7	8	9

As you turn the DIAL TUNE/JOG dial clockwise, the letter changes in the above order. If you turn it counterclockwise, it changes in the opposite order. Turn the dial until the desired letter appears on the display.

Note: Make sure that the DIAL LOCK switch is not locked.

To delete a letter, press PAGE FEED – ⇧.
To insert a space, press PAGE FEED + ⇩.

If you memorize a station that does not have a Station Name onto a blank station, a Station Name is given automatically. The symbol "*" and the frequency number appear on the Station Name Area and on the Station Selection Line.
Example:
FM 98.0 MHz is memorized as "*98.0".
AM 15360 kHz is memorized as "*15360".

Notes on Tuning Pages:
- If the station has a new Station Name, you cannot memorize it on a station number that already has a Preset Station Name. You can memorize it only on a blank station.
- If the station does not have a new Station Name, you can either memorize it on a blank station or add it to an already memorized Preset Station Name. (See page 25 for details.)
- You cannot overwrite a station on the Tuning Page except for the following cases. If you want to erase a station, see page 24.

- You can overwrite a new station onto a previously memorized station if:
— The previously saved station does not have a Program Time, but the new station with the same Station Name and frequency number has a Program Time.
— The previously saved station has a Program Time, but the new station with the same Station Name and frequency does not have a Program Time.
- You can eliminate the Program Time from that station by inputting the same time for both the starting time and ending time also.
- When you press the ENTER button in step 13, the underlines on the Station Name line of the Turning Page flash to let you know which station numbers can be memorized on.

Notes on Timer Page:
- If you memorize a station on the number where a station has already been memorized, the previous station is be erased and replaced by the new one.
- If you memorize a station without Station Name on a previously memorized station, the Station Name does not change but the programmed data is replaced by the new data.
- Each station on the Timer Page can have only one Frequency.

Demonstration mode

This unit has a demonstration mode in which all the preset stations in the Tuning Pages are tuned in for 3 seconds each sequentially.

Press FREE while keeping METER BAND depressed.

"DEMO START" is displayed and the demonstration mode starts from the first Page.

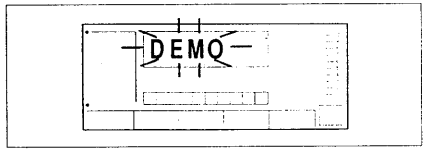

About the key words
You can memorize the following "key words" for the demonstration mode
"GOTOnn" which means "go to Page nn."
"RETURN" which means "return to Page 1."
Input these key words as the Station Names for the Preset Station using the same procedure as for making the Station Names on page 21.
These Station Names work as key words only in the demonstration mode.

To Memorize a Station on the Quick Page

You can memorize one of the following two data in a Preset Station on the Quick Page:
- Station Name (of the Station on the Tuning Page)
- band and frequency of the broadcast and AM detection mode

To memorize a station

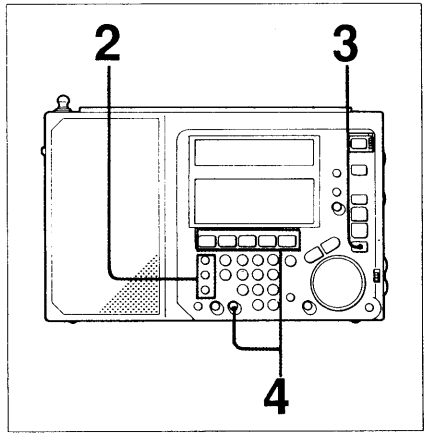

1 Tune in the desired station by manual, direct, scan or Preset Station tuning.
2 For AM, select the AM mode. (See page 18.)
3 Select Q1 or Q2 by pressing QUICK PAGE.
4 While keeping ENTER depressed, press the desired station number; S1, S2, S3, S4, or S5.

The memorized Station Name or frequency appears on the Station Selection Line. The Station Name will be displayed in small letters.
If you tune in a station using manual, direct, or scan tuning, the frequency appears on the Station Selection Line, and the Station Name Area remains blank.

Example 1
If you memorize a station using manual, direct or scan tuning:

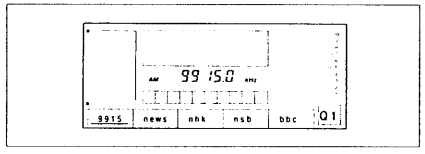

Example 2
If you memorize a station using Preset Station Tuning:

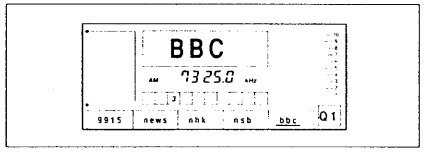

Note
If you memorize a station on the Station number, the previous station is erased and replaced by the new one.

How to Erase a Frequency or a Station

You can erase a Station on the Tuning Page and Timer Page by following the procedures below. For the Tuning Page, you can erase a Frequency.

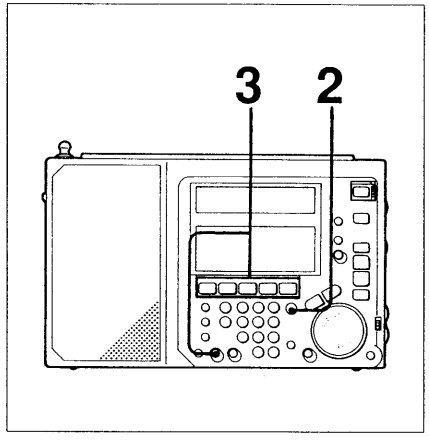

1 Tune in the Preset Station to be erased. Select the Frequency also if necessary. (See pages 12, 14, 16)
2 Press EDIT.
3 While keeping TIMER CHECK/ERASE depressed, press the Station number to be erased: S1, S2, S3, S4, or S5.

The Frequency that you tuned in in step 1 is erased.
If the Station Name has only one Frequency, that station becomes a "Blank" station.
If the Station Name has more than two Frequencies, only the tuned Frequency is erased and the rest remains. The Station Name remains also.

If you want to erase all the Frequencies in the Station Name
Repeat step 3.
When all the Frequencies are erased, the Station Name disappears.

If there is a Preset Station with the same Station Name
After the Preset Station is erased, other Station with the same name is tuned in so that it can be erased if you want to.

About the beep sound
A beep sound is heard when you press TIMER CHECK/ERASE to warn you that the Station or Frequency will be erased.

How to Add a Frequency

You can memorize up to 10 Frequencies under each Station Name on the Tuning Page. The Frequencies can hold some or all of the following data:
- band and frequency of the broadcast
- AM detection mode
- Program Time (starting time and ending time)

The Station Name will be the same one as the previously memorized station.

You can save up to 162 Frequencies in total on the Tuning Pages.

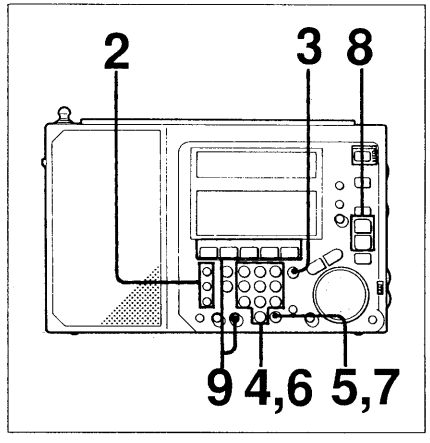

1 Tune in the desired station.
2 For AM, select the desired AM mode.

If you do not want to program the Program Time, go to step 8.

3 Press EDIT.
"START TIME" flashes.

4 Input the starting time by pressing DIRECT TUNE/TIME INPUT numeric buttons. (See page 21.)
5 Press EXE.
"END TIME" flashes.
6 Input the ending time by pressing DIRECT TUNE/TIME INPUT numeric buttons. (See page 21.)
7 Press EXE.
"START TIME" flashes again.

The Program Time duration is indicated by the Program Time Bar on the clock/timer display.

8 Select the Page that has the Station Name to be added to by pressing PAGE FEED + or –.

9 While keeping ENTER depressed, press the desired station number; S1, S2, S3, S4, or S5.

The station is added as a new Frequency and will have a Frequency number for it. (The new Frequency will be added next to the Frequency number which was tuned in last time under that Station.)

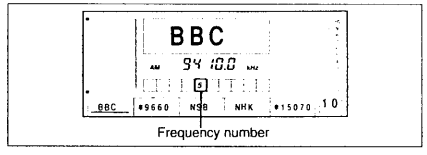

Frequency number

Note:
If you make a new Station Name, you cannot add it as a Frequency; it is memorized as a new Station.

To see how many more Frequencies can be memorized

Press FREE.
"FREE" and the number of Frequencies that you can save is displayed on the Station Name Area.
Example:
When you can save 20 more Frequencies, "FREE 20" appears on the display.

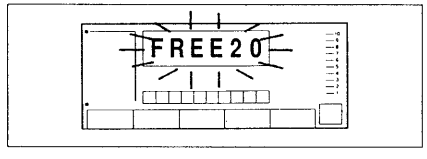

Press FREE again to go back to Station Name display.

To tune in all the Frequencies under the Station Name — Auto tune

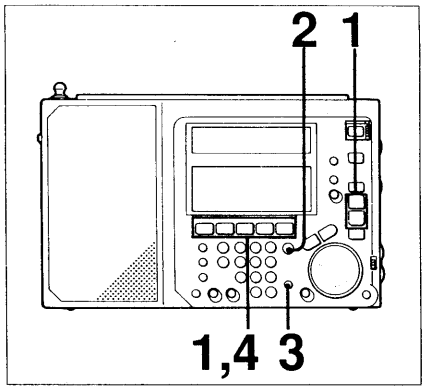

1 Tune in the desired Preset Station.
2 Press EDIT.
3 Press SCAN/AUTO TUNE to display AUTO TUNE.
The Auto Tune mode is memorized.
4 Press the station number (S1, S2, S3, S4, or S5) for that Station Name on that station.
The Auto Tune function is activated. "AUTO TUNE" displays and all the Frequencies are tuned in sequentially for a second. Then, the Frequency with the strongest signal strength is tuned in.

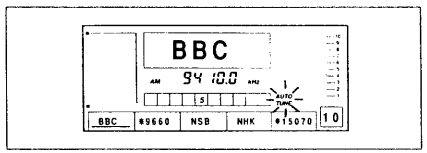

Once the Auto Tune mode is memorized, the Auto Tune function activates each time you select that Station Name by Preset Station Tuning (Tuning Page or Quick Page).

To cancel the Auto Tune mode
Follow the same procedure as above. When you press SCAN/AUTO TUNE again in step 3, the AUTO TUNE indication disappears.

Note
You can memorize and cancel the Auto Tune mode only on Station Names on the Tuning Page. However, once you memorize the Auto Tune mode on a Station, the Auto Tune function works also when you tune in the same Station Name on a Quick Page.

Sleep Timer Operation

You can make the radio turn off automatically after 15, 30, or 60 minutes by the sleep timer.

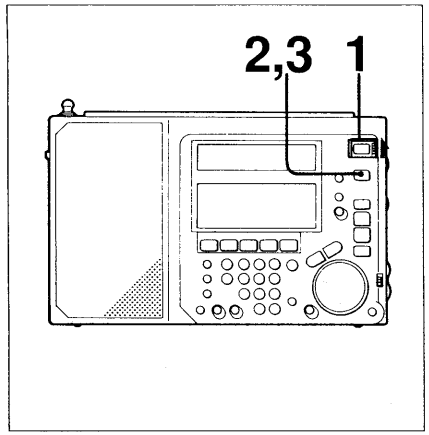

1 Set POWER/LOCK to POWER.
2 Press SLEEP.
The power turns on.
3 Select the sleep timer time by pressing SLEEP.
Each time you press it, the display changes to "60", "30", and "15". When you press it again, the power turns off.

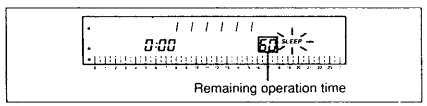

4 Tune in the desired station.

The remaining operation time is displayed as the time elapses.
The radio will be turned off automatically at the preset time.

How to Set the Timer

You can set up to 5 different programs for timer operation. The programs are those saved on the Timer Page. (See page 12.) Timer operation can be activated either when the power is turned off or when you are listening to another station.

Before setting the timer, make sure that the desired stations and Program Time have been saved on the Timer Page. If not, see page 21 and memorize them.

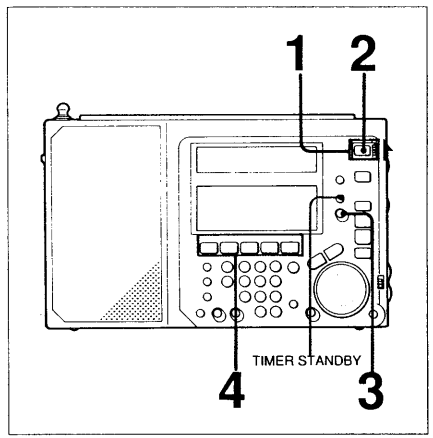

1 Set POWER/LOCK to POWER.
2 Press ON/OFF.
3 Press and hold RESERVE and display "TP" to select Timer Page.

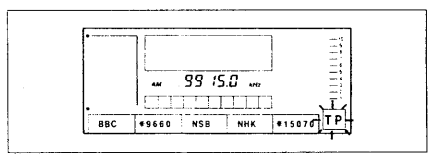

4 While keeping RESERVE depressed, press the desired Station number (S1, S2, S3, S4, or S5).
STANDBY and the reserved number appears on the clock/timer display.

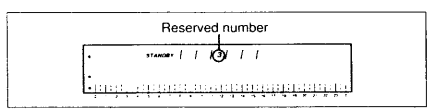

5 Repeat step 4 if you want to set the other four timers.
6 Turn off the power by pressing ON/OFF or tune in another station.

Note: The timer does not operate if you set POWER/LOCK to LOCK.

When starting time comes, the radio turns on and tunes in the programmed station. If you are listening to another station, the station changes automatically to the programmed station. The remaining time until the ending time is displayed as the time elapses.
When the ending time comes, the radio will be turned off automatically or tunes in the station that you were listening to before the timer was activated.

While the timer is activated, the TIMER and 🔑 (key protect) indication appears on the clock/timer display. All the buttons are locked. To release the key protect, press KEY PROTECT 🔑.

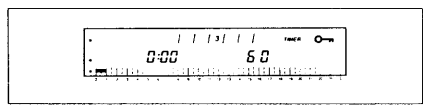

About the error message
When you press any button while TIMER 🔑 is displayed, "TIMER" appears on the Station Name Area three times to let you know that timer operation is activated.

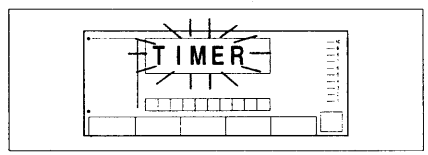

To cancel the timer

Press TIMER STANDBY.
The reservation for all the timer programs is canceled. When you press TIMER STANDBY again, all the timer programs are set again. (Only while POWER/LOCK is set to POWER.)

To cancel the reservation of each timer program

While keeping RESERVE depressed, press the desired Station number. Only the pressed number disappears from the display.

About the priority of the timer programs

When two or more timer programs overlap, priority is given in the order from Timer 1 to Timer 5.
For example, Timer 1 has priority over Timer 2.
Example 1 shows that Timer 2 cannot start to activate until the ending time for Timer 1.
Example 2 shows that Timer 1 starts to activate even during Timer 2.
In Example 3, Timer 2 is switched to Timer 1 once and is switched back to Timer 2 again after the ending time for Timer 1.

Example 1:

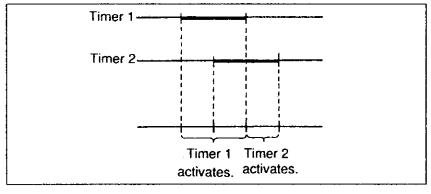

Example 2:

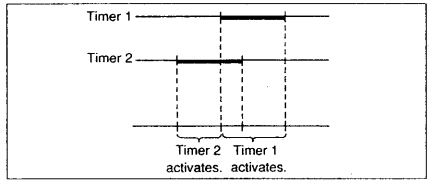

Example 3:

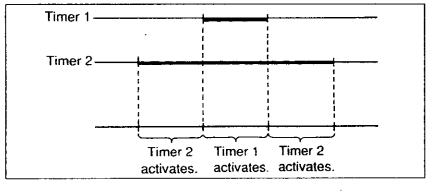

To use the sleep timer after setting the timer programs

Press SLEEP and tune in the desired station after setting the timer. The radio turns off by the sleep timer when you go to sleep, and turns on with another program by the timer when you wake up.

Note
The timer has priority over the sleep timer. Therefore, if the starting time of the timer comes during the sleep timer operation, the programmed station of the timer is tuned in.

To check the Program Time of the timer programs
While keeping TIMER CHECK ERASE depressed, press the Station number (S1, S2, S3, S4, or S5) for the station to be checked. The Station Name and its frequency appears in the frequency display, and the "START TIME" and "END TIME" for that timer program appears in the clock/timer display.

External Antenna Connection

How to Use the Supplied SW Compact Antenna — For Better SW Reception

Usually the telescopic antenna is sufficient for SW reception. However, in a metal or concrete building, the use of the supplied SW compact antenna (AN-71) is recommended.

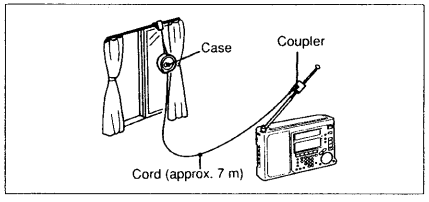

1 Fully pull out the cord from the case.
2 Attach the coupler to the telescopic antenna.
3 (When the window can be opened): Extend the cord and the case out through the window, after making sure there is no danger.
(When the window cannot be opened): Fully extend the cord along the frame of the window.

After using

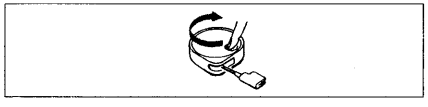

How to Use an External Antenna (Not Supplied)

For SW reception

Usually, the telescopic antenna is sufficient for SW reception. However, in a building or for more stable SW reception, use an SW external antenna (not supplied) with the supplied antenna connector. You can also use the wide range antenna AN-1 or AN-102 (not supplied, see page 30 for details).

Connection
1 Connect the ground wire (if necessary) and the spade lug of the SW external antenna to the terminals on the supplied antenna connector, close the lid and tighten the screws.

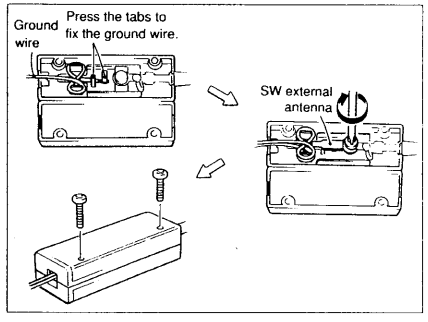

2 Connect the antenna connector to the AM EXT ANT jack of the unit.

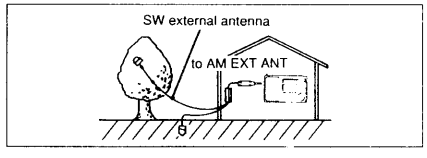

When reception is noisy, connect one end of a ground wire to the antenna connector as illustrated and the other end directly to a convenient earth ground.

For LW/MW/SW Reception

Use the wide range antenna AN-1 or AN-102 (not supplied). There are two methods.

Method A
With a connecting cord, connect the OUTPUT jack of the antenna controller (supplied with the AN-1 or AN-102) and the AM EXT ANT jack of the ICF-SW77.

Method B (For LW/MW reception only)
1 With a connecting cord, connect the OUTPUT jack of the antenna controller and the INPUT jack of the antenna coupler (supplied with the AN-1 or AN-102).
2 Put the antenna coupler near the ICF-SW77.

Example: When the AN-1 is used.

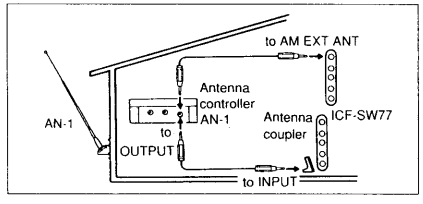

Notes
- When receiving MW or LW broadcasts without and external antenna, be sure to disconnect a SW external antenna. Otherwise, you cannot receive them as the built-in ferrite bar antenna does not function.
- Never connect a ground wire to a gas pipe. Doing so could cause a fire.
- If there is lightning, do not touch the wire of an external antenna and disconnect its AC power adaptor (if connected) immediately. Never touch the antenna wire during a lightning storm.
- When using an external antenna, retract the telescopic antenna.
- Locate the outdoor antenna as far away from the street as possible.
- For details about the external antenna, refer to its instruction manual.

Recording a Broadcast

You can record radio programs by connecting a tape recorder to the LINE OUT jack as illustrated below. Use the RK-G135 connecting cord (not supplied) for monaural recording, or RK-G134 (not supplied) for FM stereo recording.

Tune in the desired station and start recording on the tape recorder.
The volume control setting on the radio has no effect on the recording.
Note: For FM stereo recordings you must connect the earphones to the PHONES jack. Otherwise, the sound cannot be recorded in stereo.

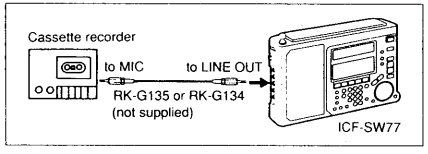

To start recording at the desired time

You can start recording at the desired time by connecting the Sony TCM-27 or TCM-77 cassette-corder (not supplied) to the LINE OUT and REMOTE jacks as illustrated below. Use an RK-G69 and an RK-G135 connecting cords (not supplied) and a PC-261M plug adaptor (not supplied).

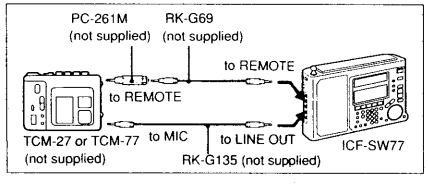

1 Tune in the desired station.
2 Set the Timer (page 27).
3 Set the standby function of the cassette recorder.
For details, see the operating instructions of the cassette-corder.

Note on recording with the timer
You cannot start recording at a desired time if you use the cassette-corder not equipped with the timer standby switch.

SECTION 3
ELECTRICAL ADJUSTMENTS

See page 25 for the adjustment location.

Main VCO Frequency Adjustment

Setup:

Band Selector: AM
Frequency: 29,999 kHz
MODE Selector: Arbitrary
Connect a jumper wire as following figure.

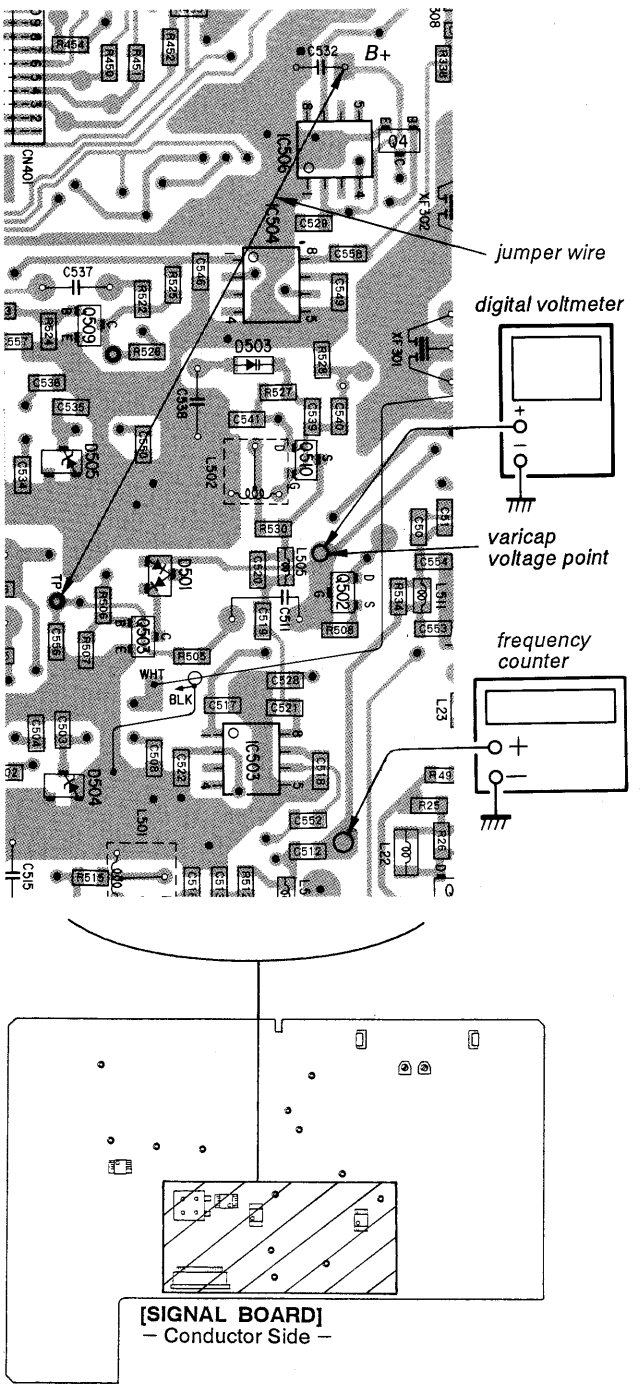

Procedure:

1. Adjust CT502 for a 54.5 MHz ± 100 kHz reading.
2. Unsolder the jumper wire at B+ land side.
   Connect this end to ground land.
   Confirm the counter reading should be less than 93 MHz.
3. After the adjustment, remove the jumper wire.
4. Confirm the digital voltmeter reading should be less than 11.3 V.

Sub VCO Freerun Frequency Adjustment

Setup:

Band selector: AM
Connect jumper wire as following figure.

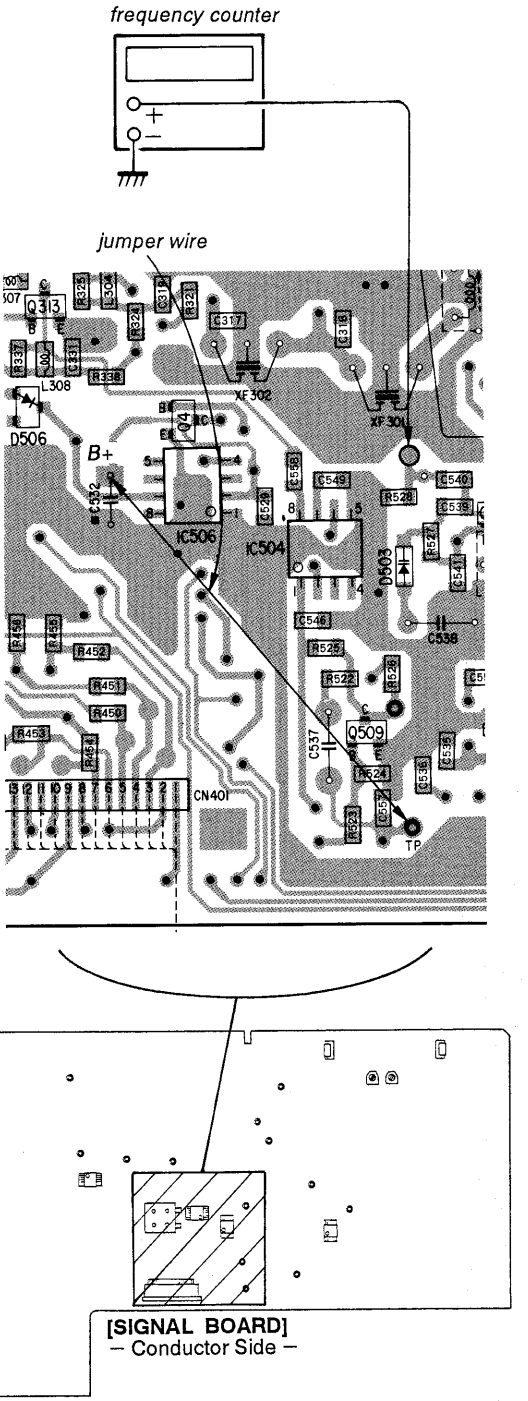

Procedure:

1. Adjust CT503 for a 53.5 MHz ± 100 kHz reading.
2. Unsolder the jumper wire at B+ land side. Connect this end to ground land. Confirm the counter reading should be less than 49 MHz.
3. After the adjustment, remove the jumper wire.

X501 (6.275 MHz) X'tal Adjustment

Setup:

Band Selector: FM
Frequency: 89.300 MHz

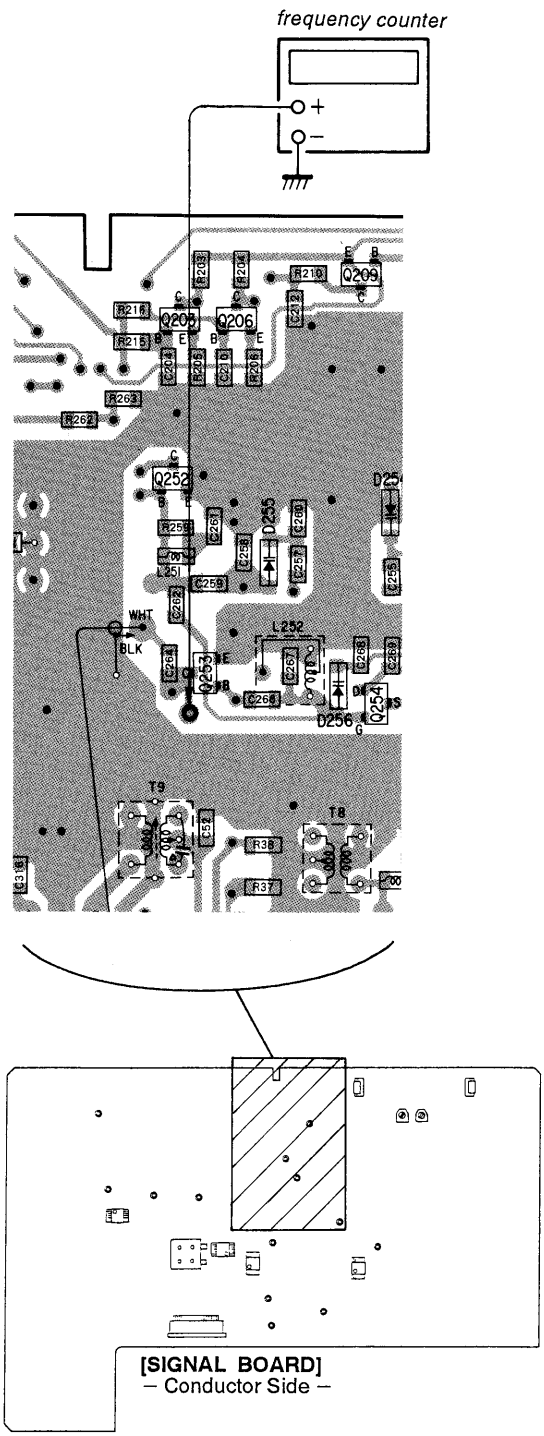

Procedure:

Adjust CT501 for a 100 MHz ± 100 Hz reading.

AM 1st IF Adjustment

Setup:

Band Selector: AM
MODE Selector: WIDE
Frequency: 150 kHz for Display
VOLUME control: Arbitrary

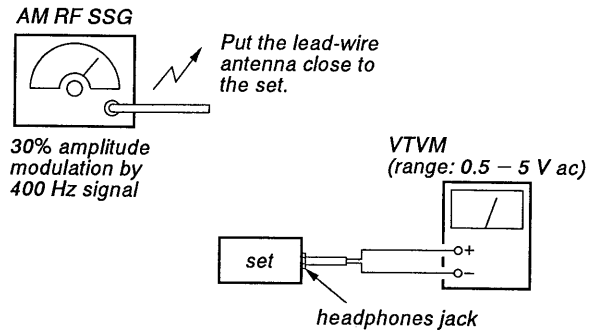

Procedure:

1. Tune in the set to the AM RF SSG frequency.
2. Adjust T9 for a maximum output level.
3. Adjust L302 and L303 alternately for a maximum and symmetrical output level.
4. Final response should be as illustrated below.

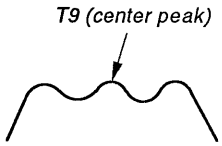

This response can be checked by detuning the set to upper and lower sides of the center frequency in same amount, or by changing SSG frequency with set's frequency unchanged.

5. Repeat above steps several times until no further improvement is obtained.

AM 455kHz IF Adjustment

Setup:

Band Selector: AM
MODE Selector: WIDE
VOLUME control: Arbitrary

Procedure:

1. Tune in the set to a known, stable and strong AM station.
2. Adjust T301 for a maximum output level.

FM IF Adjustment

Setup:

Band Selector: FM
Frequency: clear spot
VOLUME control: Arbitrary

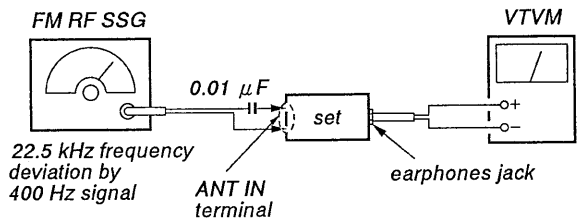

Procedure:

1. Adjust T253 to obtain a maximum signal output with VTVM.

SYNC USB/LSB ZERO-BEAT Adjustment

Setup:

Band Selector: AM
MODE Selector: SSB (USB or LSB/CW)

Procedure:

1. Tune in the set to a known, stable and strong AM station.
2. Adjust L301 for a zero-beat note.
3. Chage the MODE selector to the opposite side band (ex. first USB, next LSB/CW), and confirm it continues to hold a zero-beat note. When it doesn't, adjust again.

AM Tracking Adjustment

Setup:

Band Selector: AM

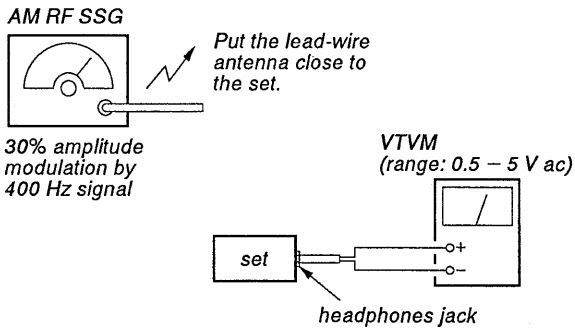

MW TRACKING ADJUSTMENT	
Adjust for a maximum reading on VTVM.	
ANT2-2	540 kHz
CT201	1,600 kHz

LW TRACKING ADJUSTMENT	
Adjust for a maximum reading on VTVM.	
ANT2-4	155 kHz
CT202	280 kHz

SW TRACKING ADJUSTMENT	
Adjust for a maximum reading on VTVM.	
CT2	17,900 kHz
T4	10,000 kHz
CT1	26,100 kHz
T5	18,000 kHz

FM Tracking Adjustment

Set up:

Band Selector: FM
Frequency: 87.5 MHz or 108.000 MHz
VOLUME control: Arbirary

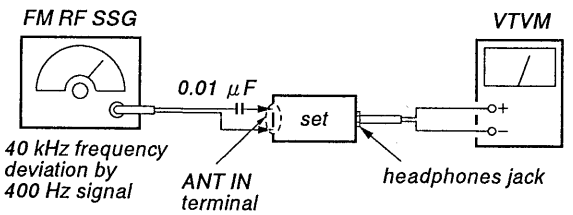

Procedure:

1. RF SSG's and Set's Frequency: 87.5 MHz
   Adjust T251 and T252 for a maximum output level.
2. RF SSG's and Set's Frequency: 108.000 MHz
   Adjust CT251, CT252, and CT253 for a maximum output level.
3. Repeat above steps several times ending with trimmers until no further inprovement is obtained.

FM Stereo Adjustment

Setup:

Band Selector: FM
VOLUME control: Arbitrary

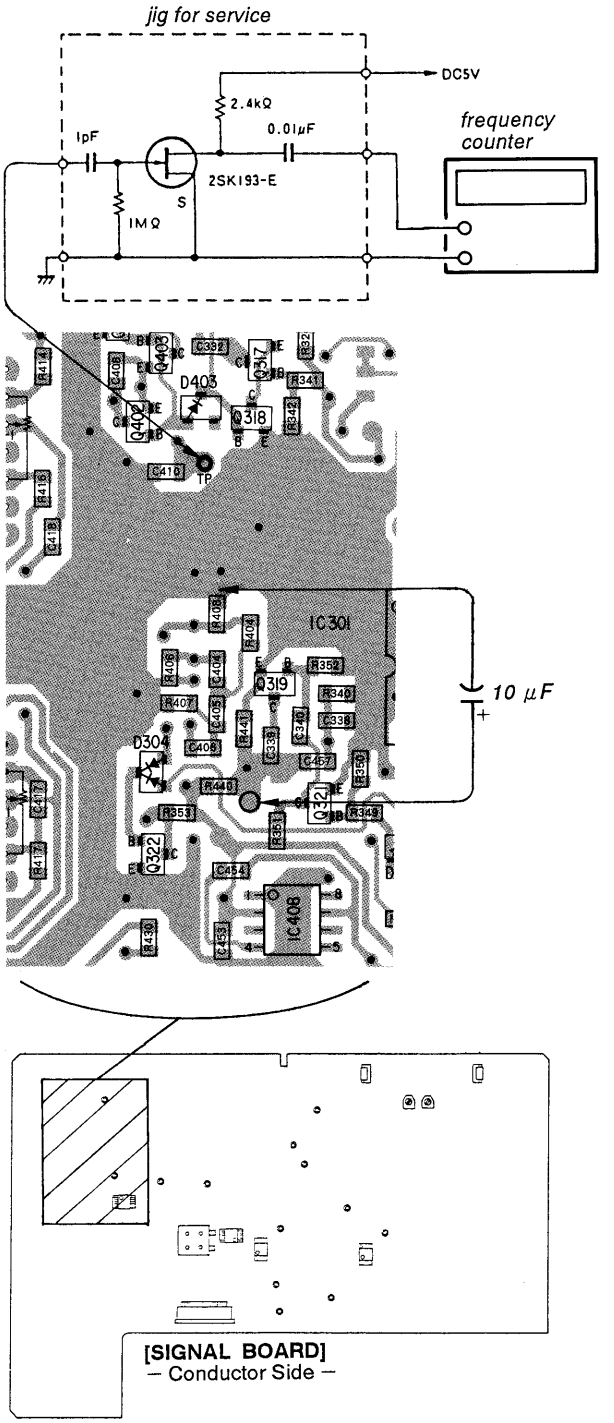

Procedure:

1. Insert the headphones to headphones jack.
2. Connect 10 μF capacitor as above figure.
3. Tune the set to 98 MHz.
4. Adjust RV401 for 75.9 – 76.1 kHz reading on the frequency counter.

FM Scan Stop Adjustment

Setup:

Band Selector: FM
VOLUME Control: Arbitrary

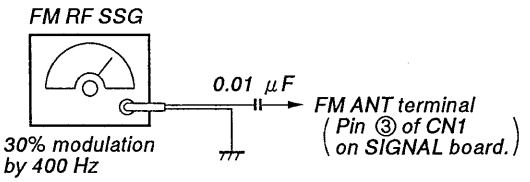

Frequency Deviation: ± 22.5 kHz
Carrier Frequency: 93.025 MHz
Output Level: 0.5mV (54 dB)

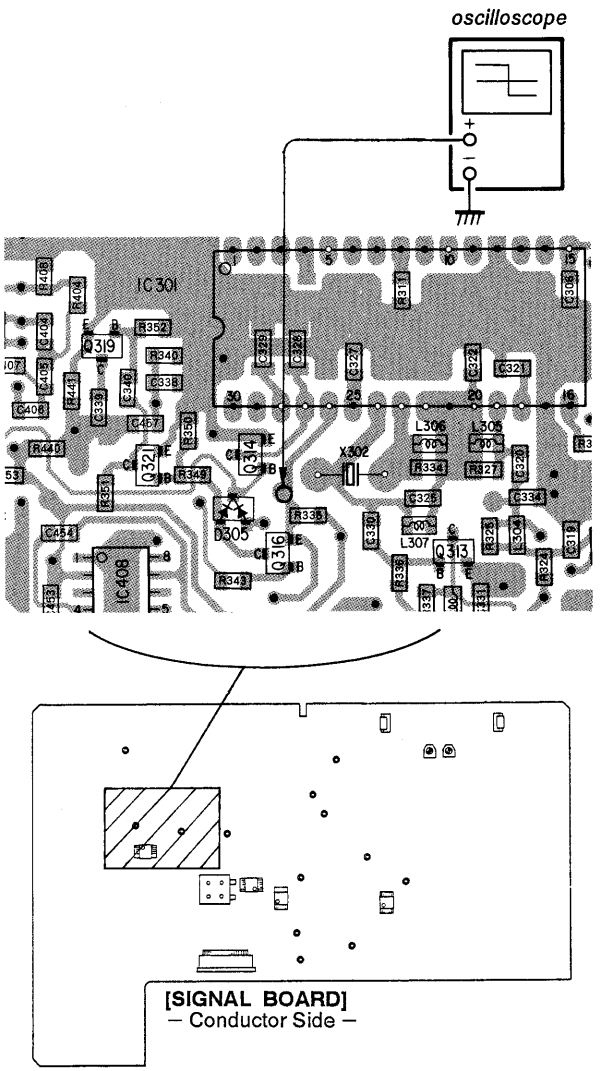

Procedure:

1. Tune the set to 93 MHz.
2. Adjust RV301 for 1.5 V down point on the oscilloscope.

Clock Frequency Adjustment (Microcomputer board)

Note: When X802 or X803 is replaced, it is necessary to adjust the clock frequency of IC related to the replaced crystal.

Setup:

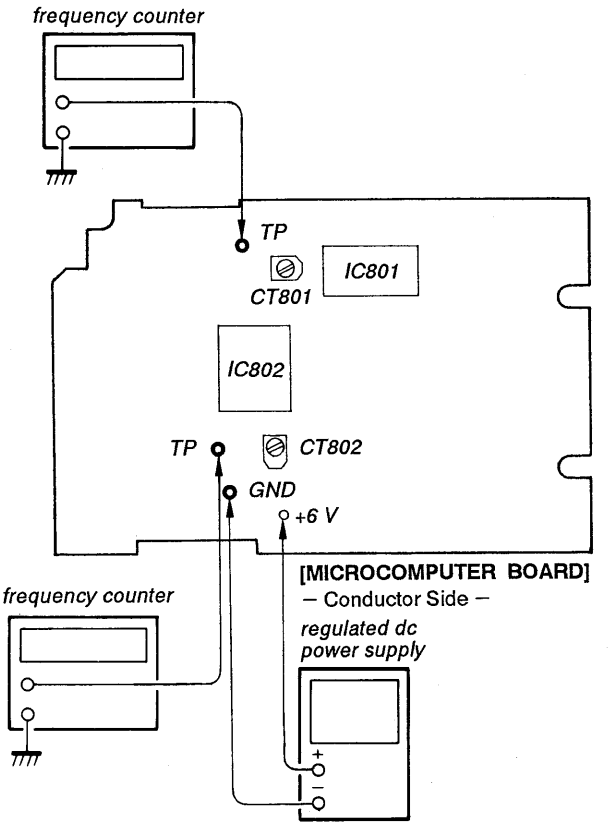

- **IC801 Clock Frequency Adjustment**

1. Connect the regulated dc power supply to the microcomputer board.
2. Press and keep on pressing S801 (TIME SET key). (Activates 2 MHz clock.)
3. Adjust CT801 for 2,008.0 ±0.2 kHz reading on the frequency counter.

Note: When S801 is released, 2 MHz clock will stop about 1 second later.

- **IC802 Clock Frequency Adjustment**

1. Connect the regulated dc power supply to the microcomputer board.
2. Turn radio on by pressing S806 (ON/OFF key).
3. Adjust CT802 for 2,008.0 ±0.2 kHz reading on the frequency counter.

REVISED

Adjustment Location

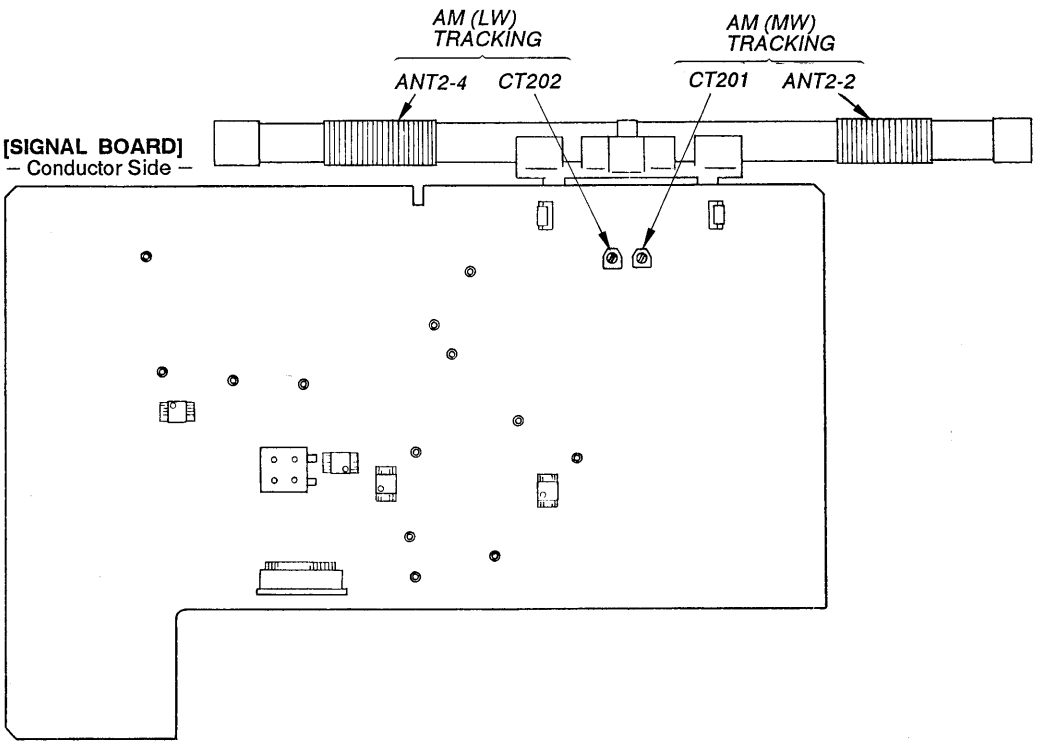

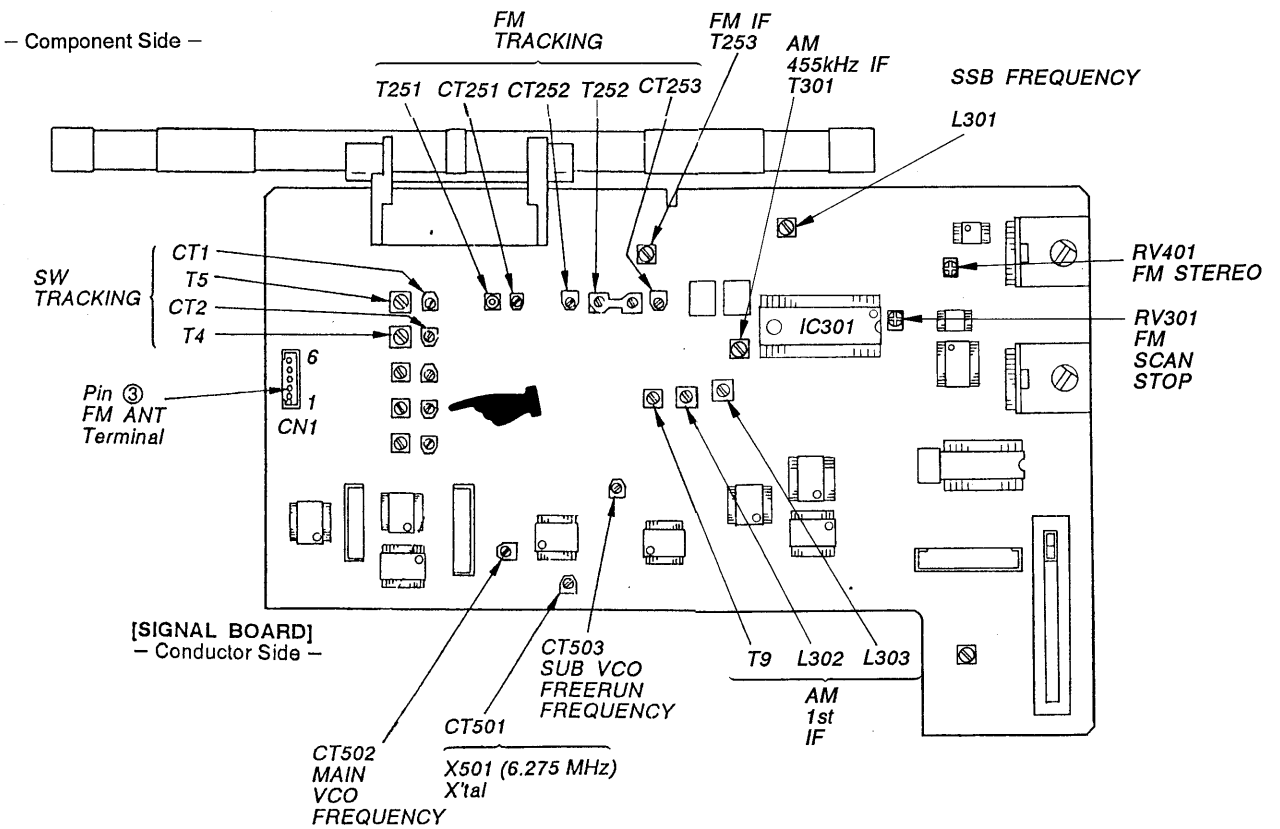

SECTION 4
DIAGRAMS

4-1. IC PIN FUNCTION
IC801 (MAIN MICRO COMPUTER)
M50933

Pin No.	Port Name	I/O	Signal Name	Description
1	S8	O	SEG8	SEGMENT SIGNAL OUTPUT TO LCD801
2	S7	O	SEG7	SEGMENT SIGNAL OUTPUT TO LCD801
3	S6	O	SEG6	SEGMENT SIGNAL OUTPUT TO LCD801
4	S5	O	SEG5	SEGMENT SIGNAL OUTPUT TO LCD801
5	S4	O	SEG4	SEGMENT SIGNAL OUTPUT TO LCD801
6	S3	O	SEG3	SEGMENT SIGNAL OUTPUT TO LCD801
7	S2	O	SEG2	SEGMENT SIGNAL OUTPUT TO LCD801
8	S1	O	SEG1	SEGMENT SIGNAL OUTPUT TO LCD801
9	S0	O	SEG0	SEGMENT SIGNAL OUTPUT TO LCD801
10	COM3	O	COM3	COMMON SIGNAL OUTPUT TO LCD801
11	COM2	O	COM2	COMMON SIGNAL OUTPUT TO LCD801
12	COM1	O	COM1	COMMON SIGNAL OUTPUT TO LCD801
13	COM0	O	COM0	COMMON SIGNAL OUTPUT TO LCD801
14	VL1	I		BIAS VOLTAGE FOR LCD801
15	VL2	I		BIAS VOLTAGE FOR LCD801
16	VL3	I		BIAS VOLTAGE FOR LCD801
17	VCC	–		POWER SUPPLY INPUT
18	CNTR	I		PULSE CONUNTER FOR ROTARY ENCODER INPUT
19	$\overline{\text{SRDY}}$	I		SERIAL COMMUNICATION READY SIGNAL INPUT
20	SCK	O		SERIAL COMMUNICATION CLOCK OUTPUT
21	SO	O		SERIAL COMMUNICATION DATA OUTPUT
22	SI	I		SERIAL COMMUNICATION DATA INPUT
23	SSTART	O		SERIAL START SIGNAL OUTPUT. COMMUNICATED WITH IC802
24	$\overline{\text{SREQ}}$	I		SERIAL COMMUNICATION REQUEST FROM IC802
25	XCI	I		CONNECTED TO CRYSTAL OSCILLATOR (X801)
26	XCO	O		CONNECTED TO CRYSTAL OSCILLATOR (X801)
27	$\overline{\text{INT1}}$	I		PULSE COUNTER FOR ROTARY ENCODER INPUT
28	VSS	I		CONNECTED TO GROUND
29	$\overline{\text{RESET}}$	I		RESET SIGNAL INPUT
30	XI	I		CONNECTED TO CRYSTAL OSCILLATOR (X802)
31	XO	O		CONNECTED TO CRYSTAL OSCILLATOR (X802)
32	VSS	–		CONNECTED TO GROUND
33	P27	I	(P27)	KEY INPUT REQUEST FOR $\overline{\text{KR7}}$ AND $\overline{\text{KR8}}$
34	P26	I	$\overline{\text{KR6}}$	KEY RETURN SIGNAL INPUT
35	P25	I	$\overline{\text{KR5}}$	KEY RETURN SIGNAL INPUT
36	P24	I	$\overline{\text{KR4}}$	KEY RETURN SIGNAL INPUT
37	P23	I	$\overline{\text{KR3}}$	KEY RETURN SIGNAL INPUT
38	P22	I	$\overline{\text{KR2}}$	KEY RETURN SIGNAL INPUT
39	P21	I	$\overline{\text{KR1}}$	KEY RETURN SIGNAL INPUT
40	P20	I	$\overline{\text{KR0}}$	KEY RETURN SIGNAL INPUT

Pin No.	Port Name	I/O	Signal Name	Description
41	P17	I	$\overline{KR8}$	KEY RETURN SIGNAL INPUT
42	P16	I	$\overline{KR7}$	KEY RETURN SIGNAL INPUT
43	P15	O	$\overline{KS5}$	KEY SCAN OUTPUT
44	P14	O	$\overline{KS4}$	KEY SCAN OUTPUT
45	P13	O	$\overline{KS3}$	KEY SCAN OUTPUT
46	P12	O	$\overline{KS2}$	KEY SCAN OUTPUT
47	P11	O	$\overline{KS1}$	KEY SCAN OUTPUT
48	P10	O	$\overline{KS0}$	KEY SCAN OUTPUT
49	P07	I	OFF LOCK	KEY LOCK DETECT INPUT
50	P06	I	RE LOCK	ROTARY ENCODER LOCK DETECT INPUT
51	P05	I	$\overline{EMPTY}$	BATTRY EMPTY SIGNAL INPUT
52	P04	I	EXCHG	BATTRY CHANGE SIGNAL INPUT
53	P03	O	NC	NOT CONNECTED
54	P02	O	PRE	POWER SUPPLY CONTROL SIGNAL FOR IC802
55	P01	O	LIGHT	LED DRIVE OUTPUT
56	P00	O	RESET	RESET SIGNAL OUTPUT TO IC802
57	S31	O		SEGMENT SIGNAL OUTPUT TO LCD801
58	S30	O		SEGMENT SIGNAL OUTPUT TO LCD801
59	S29	O		SEGMENT SIGNAL OUTPUT TO LCD801
60	S28	O		SEGMENT SIGNAL OUTPUT TO LCD801
61	S27	O		SEGMENT SIGNAL OUTPUT TO LCD801
62	S26	O		SEGMENT SIGNAL OUTPUT TO LCD801
63	S25	O		SEGMENT SIGNAL OUTPUT TO LCD801
64	S24	O		SEGMENT SIGNAL OUTPUT TO LCD801
65	S23	O		SEGMENT SIGNAL OUTPUT TO LCD801
66	S22	O		SEGMENT SIGNAL OUTPUT TO LCD801
67	S21	O		SEGMENT SIGNAL OUTPUT TO LCD801
68	S20	O		SEGMENT SIGNAL OUTPUT TO LCD801
69	S19	O		SEGMENT SIGNAL OUTPUT TO LCD801
70	S18	O		SEGMENT SIGNAL OUTPUT TO LCD801
71	S17	O		SEGMENT SIGNAL OUTPUT TO LCD801
72	S16	O		SEGMENT SIGNAL OUTPUT TO LCD801
73	VSS	–		CONNECTED TO GROUND
74	S15	O		SEGMENT SIGNAL OUTPUT TO LCD801
75	S14	O		SEGMENT SIGNAL OUTPUT TO LCD801
76	S13	O		SEGMENT SIGNAL OUTPUT TO LCD801
77	S12	O		SEGMENT SIGNAL OUTPUT TO LCD801
78	S11	O		SEGMENT SIGNAL OUTPUT TO LCD801
79	S10	O		SEGMENT SIGNAL OUTPUT TO LCD801
80	S9	O		SEGMENT SIGNAL OUTPUT TO LCD801

IC802(SUB MICRO COMPUTER)
M37450M8

Pin No.	Port Name	I/O	Signal Name	Description
1	NC	–	NC	NOT CONNECTED
2	P31	O	NC	NOT CONNECTED
3	EV1	O	BEEP	BEEP SIGNAL OUTPUT
4	P57	I	$\overline{BUSY}$	LCD802-1 CONTROL DRIVER IC805 ACTIVATING SIGNAL INPUT
5	P56	O	$\overline{CS}$	SELECT SIGNAL OUTPUT TO LCD802-1 CONTROL DRIVER IC805
6	P55	O	C/$\overline{D}$	DATA/CONTROL SELECT SIGNAL OUTPUT TO CONTROL DRIVER IC805
7	P54	O	SI	DATA SIGNAL OUTPUT TO CONTROL DRIVER IC805
8	P53	O	$\overline{CLK}$	CLOCK SIGNAL OUTPUT TO CONTROL DRIVER IC805
9	P52	O	$\overline{RES}$	RESET SIGNAL OUTPUT TO CONTROL DRIVER IC805
10	P51	I		CONNECTED TO GROUND
11	P50	I		CONNECTED TO GROUND
12	P67	I		CONNECTED TO GROUND
13	P66	I		CONNECTED TO GROUND
14	P65	I		CONNECTED TO GROUND
15	P64	I		CONNECTED TO GROUND
16	P63	I		CONNECTED TO GROUND
17	P62	I		CONNECTED TO GROUND
18	P61	I		CONNECTED TO GROUND
19	INI1	I	INT1	SERIAL START SIGNAL INPUT. COMMUNICATE WITH IC801
20	$\overline{WR}$	O	$\overline{WR}$	NOT CONNECTED
21	$\overline{RD}$	O	$\overline{RD}$	NOT CONNECTED
22	R/$\overline{W}$	O	R/$\overline{W}$	NOT CONNECTED
23	SYNC	O	SYNC	NOT CONNECTED
24	RESO	O	RESO	NOT CONNECTED
25	CNVSS		–	CONNECTED TO GROUND
26	$\overline{RESET}$	I	$\overline{RESET}$	$\overline{RESET}$ INPUT
27	NC	–	NC	NOT CONNECTED
28	XI	I	XI	CONNECTED TO CRYSTAL OSCILLATOR (X803)
29	XO	I	XO	CONNECTED TO CRYSTAL OSCILLATOR (X803)
30	NC	–	NC	NOT CONNECTED
31	ϕ	O	E	NOT CONNECTED
32	VSS	–		CONNECTED TO GROUND
33	P27	I		CONNECTED TO GROUND
34	P26	I	SLOCK	ON DETECTION MODE "SYNC" AND TERMINAL IS "HIGH", INDICATES "SLOCK"
35	P25	I	SD1	ON SCAN, STATION SIGNAL INPUT
36	P24	O	WAKE	"POWER ON" OF IC802 POWER SIGNAL OUTPUT ON "HIGH", ACTIVATING POWER IS ON.
37	P23	O	MUTE	MUTE SIGNAL OUTPUT. HIGH: MUTE
38	P22	O	POWER	RADIO POWER SUPPLY OUTPUT. HIGH: RADIO ON
39	P21	I/O	SDL	INPUT/OUTPUT FOR E^2PROM DATA READ/WRITE
40	P20	O	SCL	CLOCK OUTPUT FOR E^2PROM DATA READ/WRITE

Pin No.	Port Name	I/O	Signal Name	Description
41	NC	–	NC	NOT CONNECTED
42	P17	O	$\overline{WR}$	WRITE TO LCD802-2 CONTROL DRIVER IC804
43	P16	O	$\overline{RD}$	READ TO LCD802-2 CONTROL DRIVER IC804
44	P15	O	RS	RESISTOR SELECT TO LCD802-2 CONTROL DRIVER IC804
45	P14	O	BCS	CHIP SELECT TO IC101
46	P13	O	LAT2	LATCH SIGNAL FOR PLL OUTPUT
47	P12	O	LAT1	LACTH SIGNAL FOR BAND OUTPUT
48	P11	O	DTA	DATA SIGNAL FOR BAND, PLL OUTPUT
49	P10	O	CLK	CLOCK SIGNAL FOR BAND, PLL OUTPUT
50	P07	O	P07	DATA 7 OUTPUT TO IC804
51	P06	O	P06	DATA 6 OUTPUT TO IC804
52	P05	O	P05	DATA 5 OUTPUT TO IC804
53	P04	O	P04	DATA 4 OUTPUT TO IC804
54	P03	O	P03	DATA 3 OUTPUT TO IC804
55	P02	O	P02	DATA 2 OUTPUT TO IC804
56	P01	O	P01	DATA 1 OUTPUT TO IC804
57	P00	O	P00	DATA 0 OUTPUT TO IC804
58	P47	I	P47	CONNECTED TO GROUND
59	P46	I	P46	CONNECTED TO GROUND
60	P45	I	P45	CONNECTED TO GROUND
61	P44	I	P44	CONNECTED TO GROUND
62	P43	I	P43	CONNECTED TO GROUND
63	P42	I	P42	CONNECTED TO GROUND
64	P41	I	P41	CONNECTED TO GROUND
65	P40	I	SMETER	S METER SIGNAL INPUT. A/D CONVERSION IS PERFORMED
66	DA2	O	DA2	NOT CONNECTED
67	DA1	O	DA1	NOT CONNECTED
68	DAVREF	I	DAVREF	CONNECTED TO GROUND
69	ADVREF	I	ADVREF	POWER SUPPLY INPUT (+5 V)
70	AVSS	–	AVSS	CONNECTED TO GROUND
71	AVCC	–	AVCC	POWER SUPPLY INPUT (+5 V)
72	VCC	–	VCC	POWER SUPPLY INPUT (+5 V)
73	VSS	–	VSS	CONNECTED TO GROUND
74	$\overline{SRDY}$	O	$\overline{SRDY}$	SERISL READY SIGNAL OUTPUT
75	SCLK	I	SCK	SERIAL CLOCK DATA INPUT
76	SO	O	SSO	SERIAL DATA SIGNAL OUTPUT
77	SI	I	SSI	SERIAL DATA SIGNAL INPUT
78	P33	O	SREQ	CONNECTED TO GROUND
79	P32	I		CONNECTED TO GROUND
80	NC	–	NC	NOT CONNECTED

4-2. BLOCK DIAGRAM

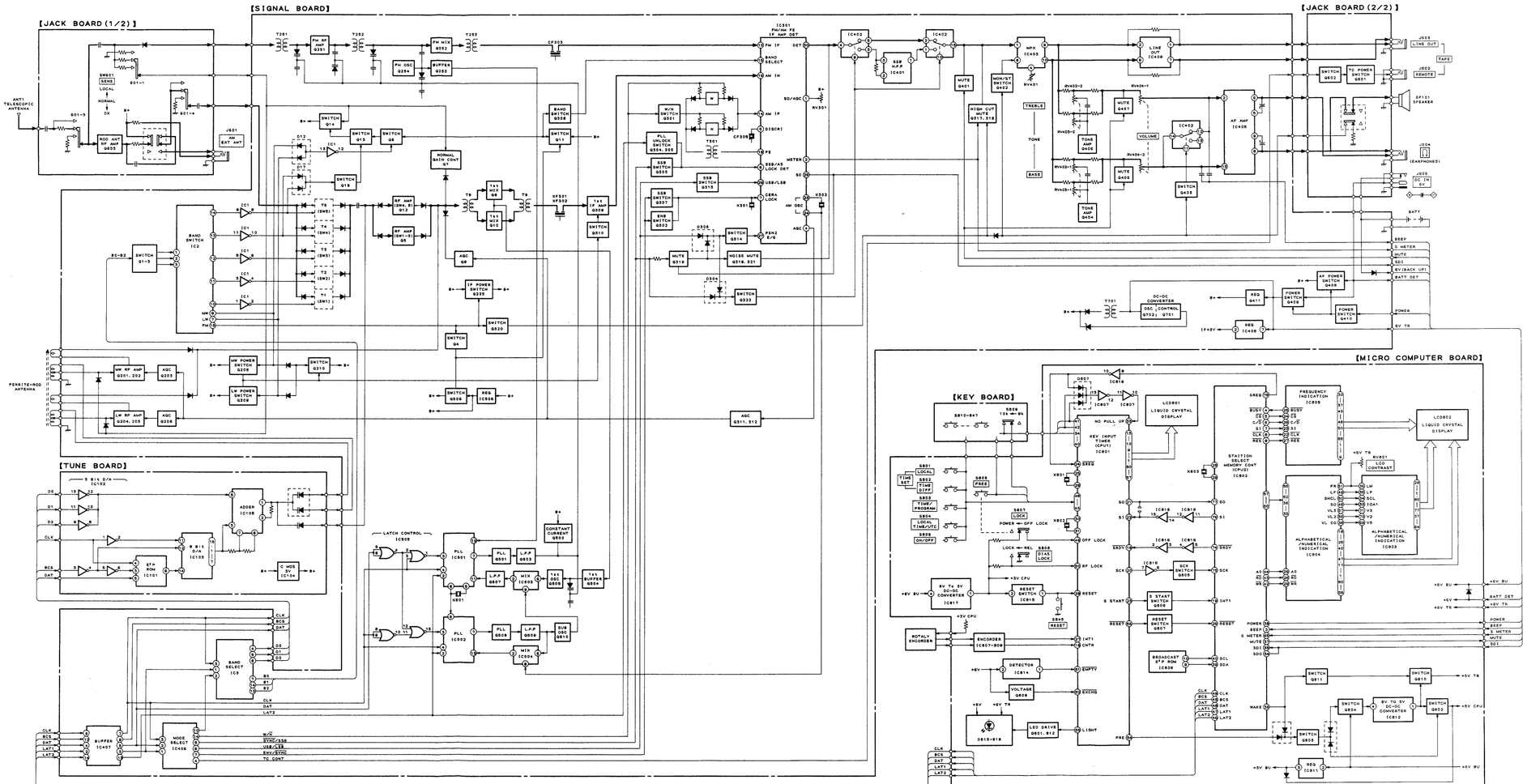

4-3. MICROCOMPUTER SECTION PRINTED WIRING BOARDS

● See page 54 for Semiconductor Lead Layouts.

REVISED

● **Semiconductor Location**

Ref. No.	Location
D802	G-13
D803	H-13
D804	J-18
D805	J-18
D806	J-21
D807	J-13
D808	J-3
D809	J-20
D810	B-12
D811	B-12
D812	J-5
D813	C-27
D814	C-17
D815	F-27
D816	G-27
D817	E-17
D818	G-17
D819	E-2
IC801	C-22
IC802	F-18
IC803	F-25
IC804	F-22
IC805	C-25
IC806	F-13
IC807	J-16
IC808	I-12
IC809	I-17
IC811	J-5
IC812	J-22
IC814	D-1
IC815	B-16
IC816	C-16
IC817	J-3
Q801	C-1
Q802	J-21
Q803	J-18
Q804	J-18
Q805	C-13
Q806	D-16
Q807	D-16
Q808	C-23
Q810	J-21
Q811	J-20
Q812	D-1

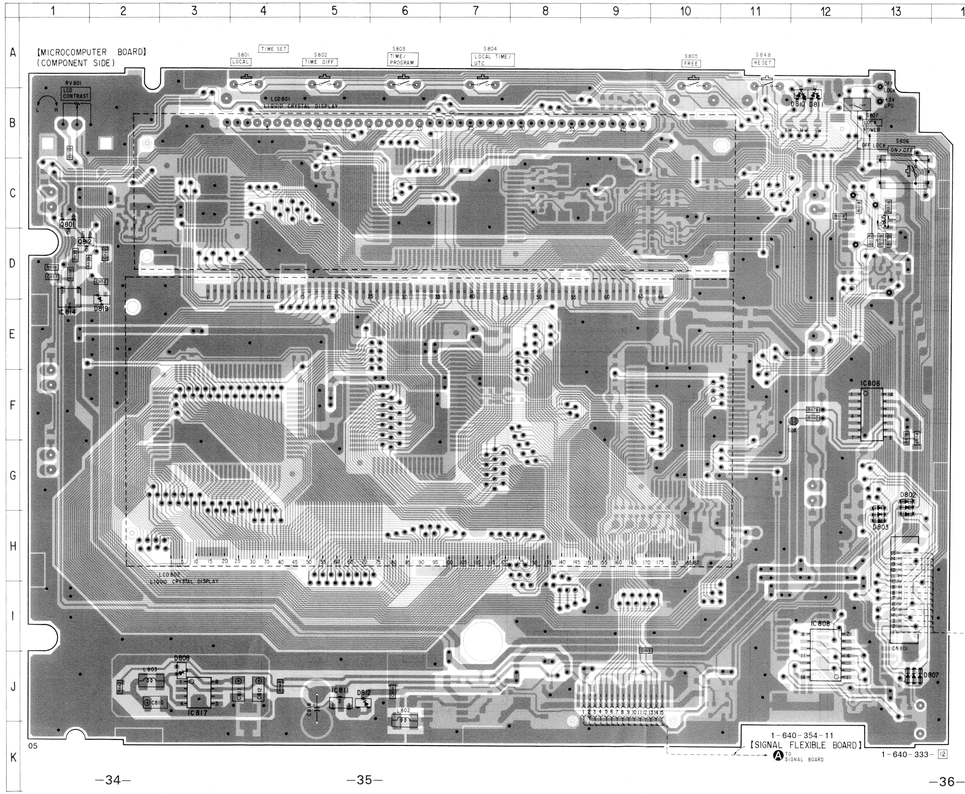

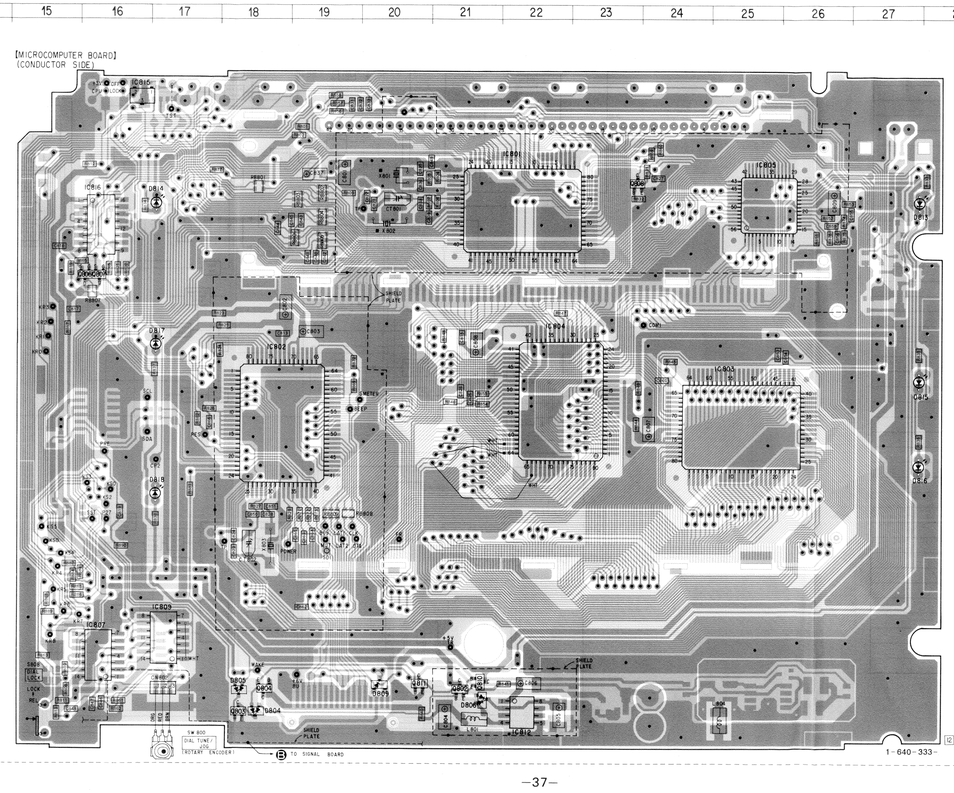

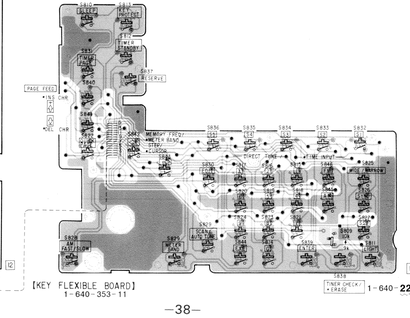

Note on Printed Wiring Board:

- ■ : parts mounted on the conductor side.
- |•| : indicates side identified with part number.
- ● : Through hole.
- : Pattern on the side which is seen.
- : Pattern of the rear side.

Note on Schematic Diagram:

- All capacitors are in μF unless otherwise noted. pF: μμF 50 WV or less are not indicated except for electrolytics and tantalums.
- All resistors are in Ω and ¼ W or less unless otherwise specified.
- B + Line.
- adjustment for repair.
- Power voltage is dc 6 V and fed with regurated dc power supply from external power voltage jack.
- no mark : Common
- Voltages are taken with a VOM (10 MΩ/V). Voltage variations may be noted due to normal production tolerances.
- Signal path.
  - ⇨ : FM

4-4. MICROCOMPUTER SECTION SCHEMATIC DIAGRAM

• See pages 55 to 58 for IC Block Diagrams and LCD Internal Connection.

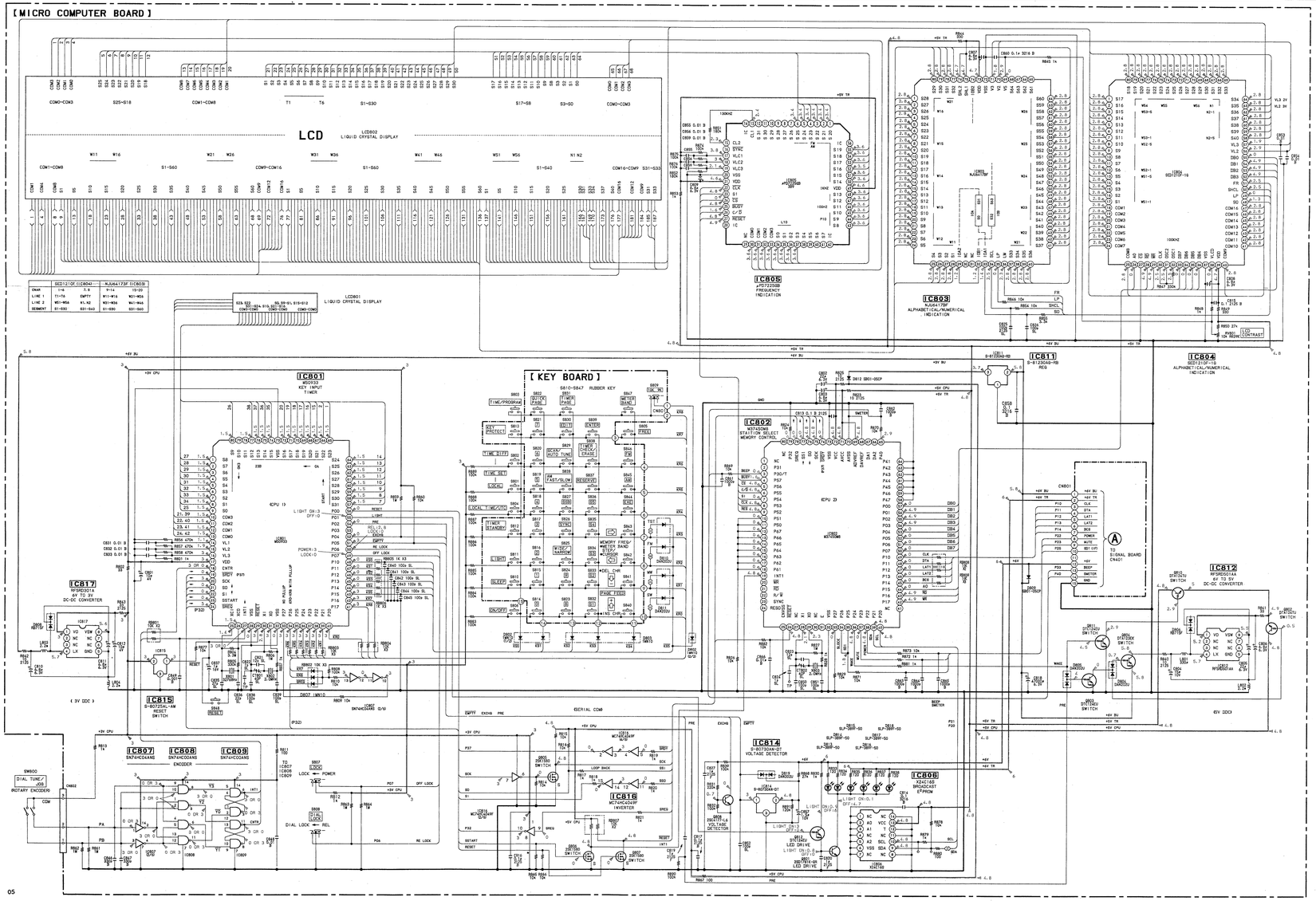

- **Signs for LCD on the Schematic Diagram Description.**
  The character display on LCD802 is activated by IC803 and IC804.

Sign indication of LCD802 on the schematic diagram	
Section	Indication on Schematic Diagram
Station Name Area Display	T1 – T6
Station Selection Line Display	W11 – W16…W51 – W56
Page Number Display	N1, N2

LCD driver IC804 drives 14 characters, T1 – T6, W51 – W56, N1, N2.
IC803 drives 24 characters, W11 – W16, W21 – W26, W31 – W36, W41 – W46.
Ex.: Characters displayed on W11 section are driven by IC804 COM1 – COM8 and IC803 S1 – S5.

LCD802

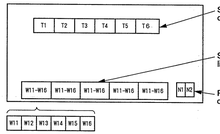

4-5. SIGNAL SECTION SCHEMATIC DIAGRAM

- See pages 55 to 58 for IC Block Diagrams.
- See page 38 for note on Sehematic Diagram.

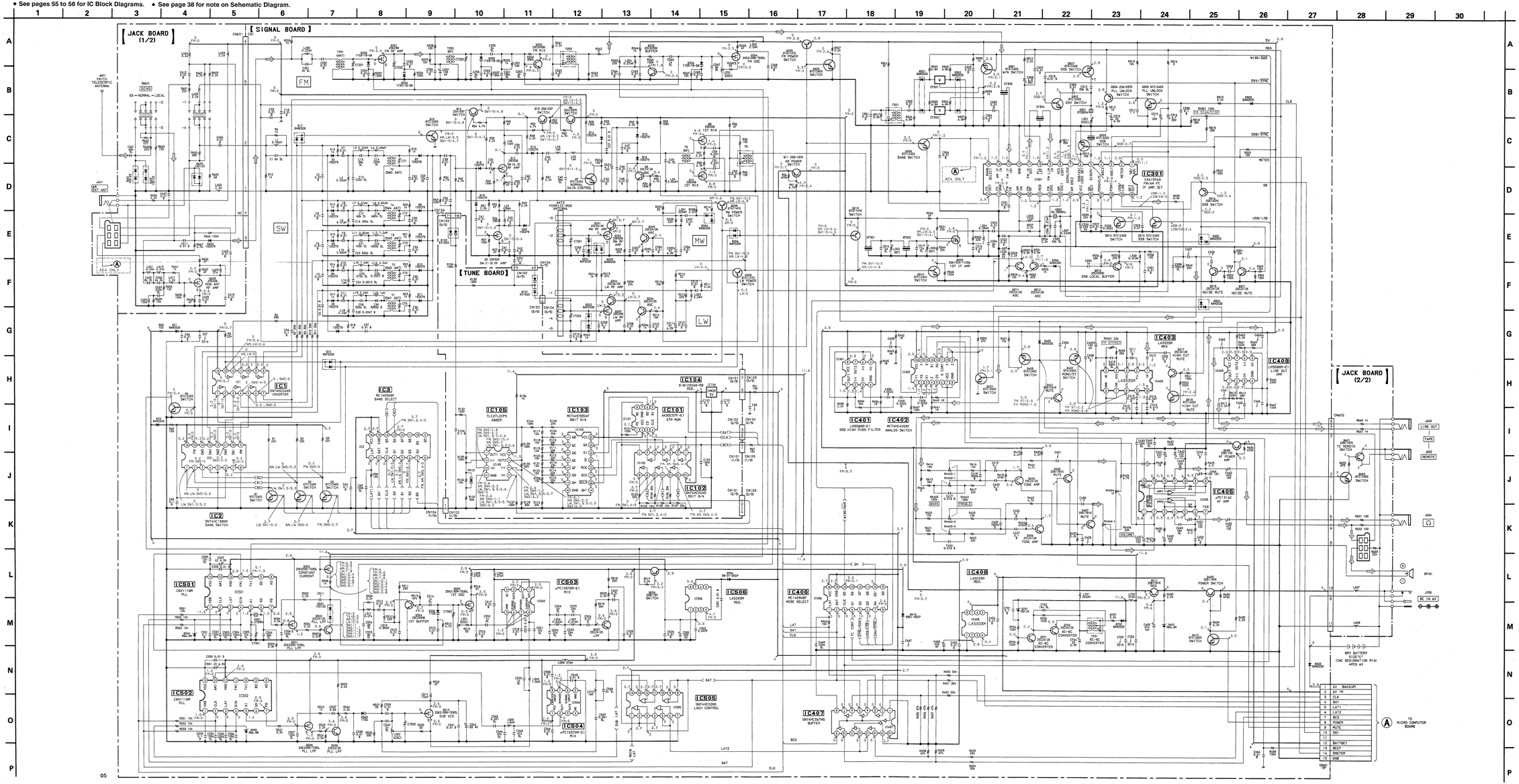

4-6. SIGNAL SECTION PRINTED WIRING BOARDS

• See page 54 for Semiconductor Lead Layouts. • See page 38 for Note on Printed Wiring Board.

[SIGNAL BOARD] (COMPONENT SIDE)

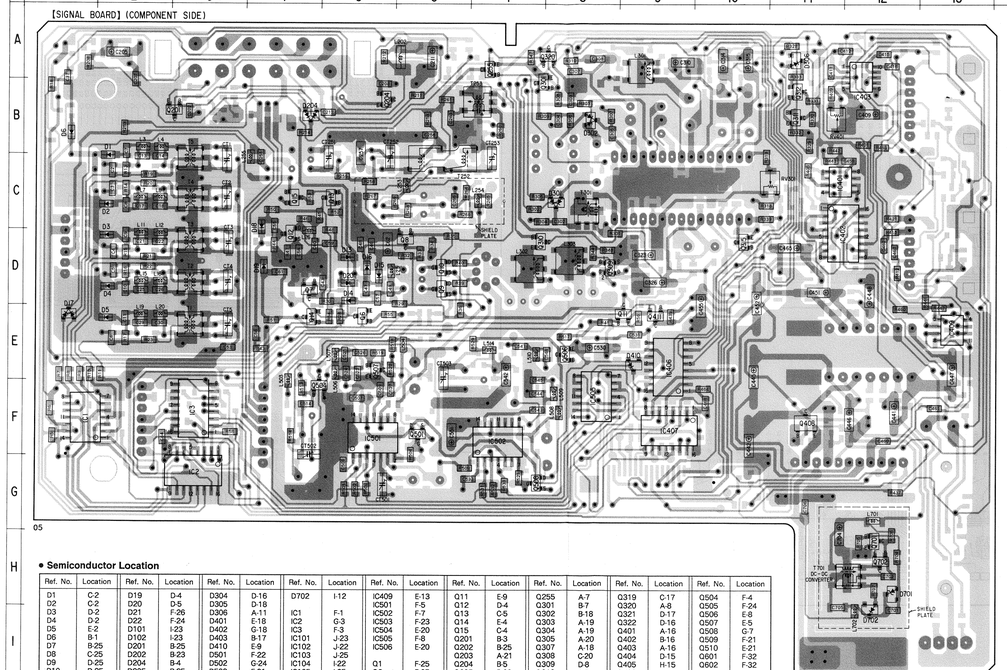

[SIGNAL BOARD] (CONDUCTOR SIDE)

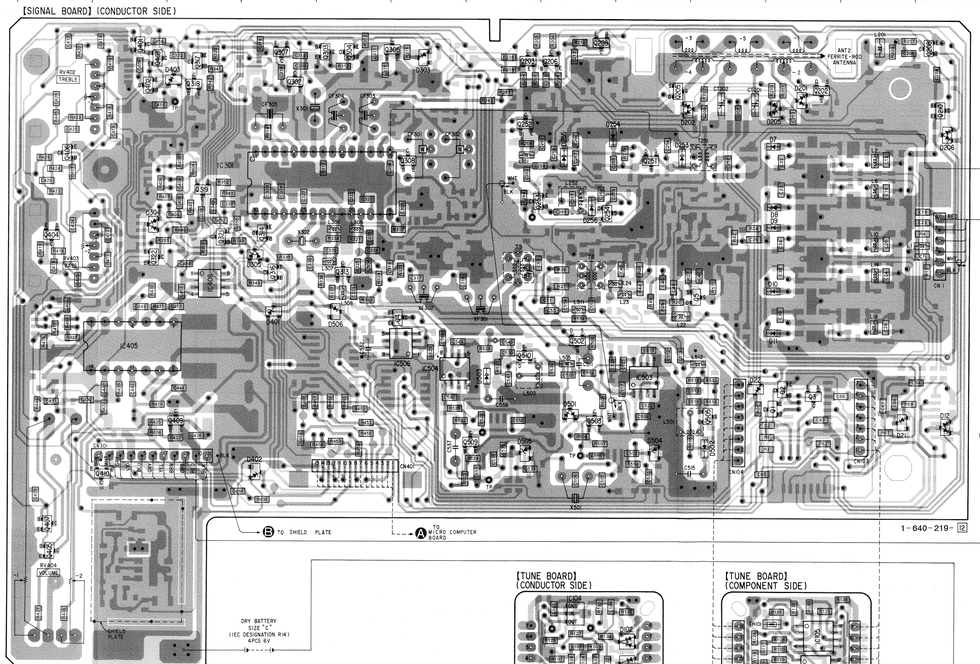

[JACK BOARD] (CONDUCTOR SIDE)

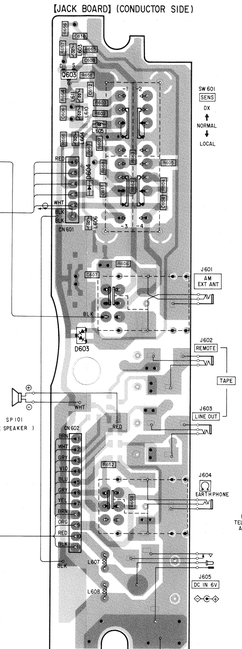

[JACK BOARD] (COMPONENT SIDE)

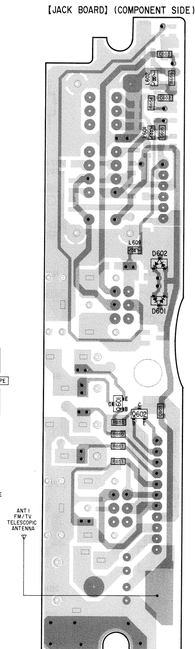

[TUNE BOARD] (CONDUCTOR SIDE)

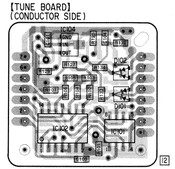

[TUNE BOARD] (COMPONENT SIDE)

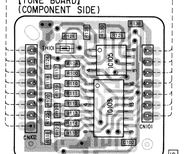

• **Semiconductor Location**

Ref. No.	Location	Ref. No.	Location	Ref. No.	Location	Ref. No.	Location	Ref. No.	Location	Ref. No.	Location	Ref. No.	Location	Ref. No.	Location	Ref. No.	Location	Ref. No.	Location
D1	C-2	D19	D-4	D304	D-16	D702	I-12	IC409	E-13	Q11	E-9	Q255	A-7	Q319	C-17	Q504	F-4
D2	C-2	D20	D-5	D305	D-18			IC501	F-5	Q12	D-4	Q301	B-7	Q320	A-8	Q505	F-24
D3	D-2	D21	F-26	D306	A-11	IC1	F-1	IC502	F-7	Q13	C-5	Q302	B-18	Q321	D-17	Q506	E-8
D4	D-2	D22	F-24	D401	E-18	IC2	G-3	IC503	F-23	Q14	E-4	Q303	A-19	Q322	D-16	Q507	E-5
D5	E-2	D101	I-23	D402	G-18	IC3	F-3	IC504	E-20	Q15	D-4	Q304	A-19	Q401	A-16	Q508	G-7
D6	B-1	D102	I-23	D403	B-17	IC101	J-23	IC505	F-8	Q201	B-3	Q305	A-20	Q402	B-16	Q509	F-21
D7	B-25	D201	B-25	D410	E-9	IC102	J-22	IC506	E-20	Q202	B-25	Q307	A-18	Q403	A-16	Q510	E-21
D8	C-25	D202	B-23	D501	F-22	IC103	J-25			Q203	A-21	Q308	C-20	Q404	D-15	Q601	F-32
D9	D-25	D204	B-4	D502	G-24	IC104	I-22	Q1	F-25	Q204	B-5	Q309	D-8	Q405	H-15	Q602	F-32
D10	D-25	D205	B-25	D503	F-21	IC105	I-25	Q2	F-25	Q205	B-23	Q310	D-7	Q406	C-15	Q603	B-28
D11	E-25	D206	B-27	D504	G-23	IC301	C-18	Q3	F-25	Q206	A-22	Q311	B-11	Q407	H-15	Q701	H-12
D12	F-27	D253	C-23	D505	G-21	IC401	D-11	Q4	E-20	Q208	A-27	Q312	B-11	Q408	F-11	Q702	H-12
D13	D-5	D254	B-22	D506	E-19	IC402	D-11	Q5	D-24	Q209	A-22	Q313	D-19	Q409	F-17		
D14	D-5	D255	C-22	D601	E-33	IC403	A-12	Q6	E-5	Q210	B-27	Q314	D-18	Q410	G-16		
D15	D-5	D256	C-22	D602	D-33	IC405	E-16	Q7	D-4	Q251	C-23	Q315	D-10	Q411	E-9		
D16	D-5	D301	C-8	D603	E-28	IC406	E-9	Q8	D-6	Q252	B-21	Q316	D-18	Q501	F-6		
D17	E-1	D302	B-8	D604	C-29	IC407	F-9	Q9	D-6	Q253	C-21	Q317	A-17	Q502	E-22		
D18	C-4	D303	A-20	D701	H-12	IC408	D-17	Q10	D-6	Q254	C-22	Q318	B-17	Q503	F-22		

• Semiconductor Lead Layouts

AK93C57F
LM358DR

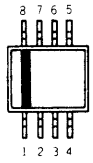

(TOP VIEW)

CXD1118M
SN74HC00ANS
SN74HC04ANS
X24C16S-C7000

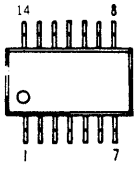

(TOP VIEW)

IMN10

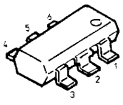

LA3335M

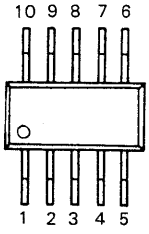

LA5003M
RF5RD301A
RF5RD501AC
TLC27L2CPS
μPC1037GR

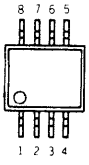

(TOP VIEW)

MC14094BF
MC74HC4049F
MC74HC4053F
MC74HC595AF
SN74HC02ANS
SN74HC138ANS
SN74HC367ANS

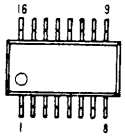

(TOP VIEW)

M37450M8-456FP
M50933-124FP

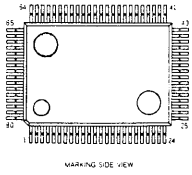

NJU6417BF

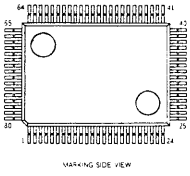

SED1210F1G

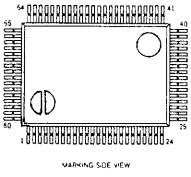

μPD7225GB-3B7

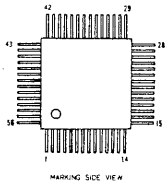

2SK132A-U36

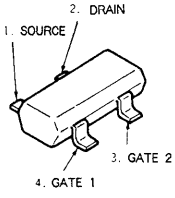

KV1560

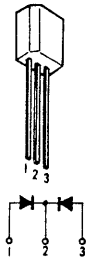

1SS279

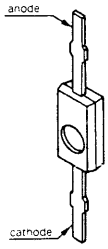

SLP-389F-51-AB

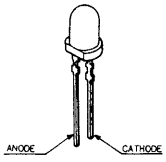

• IC Block Diagrams

IC301 CXA1376S

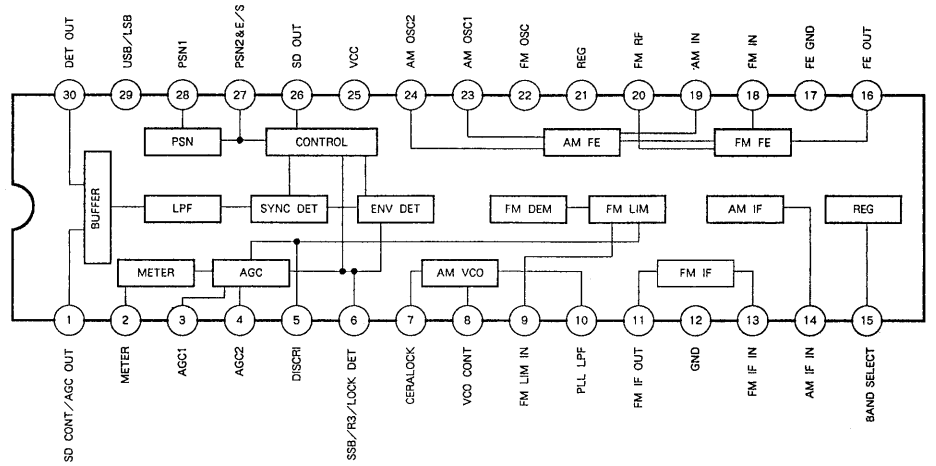

IC803 NJU6417BF

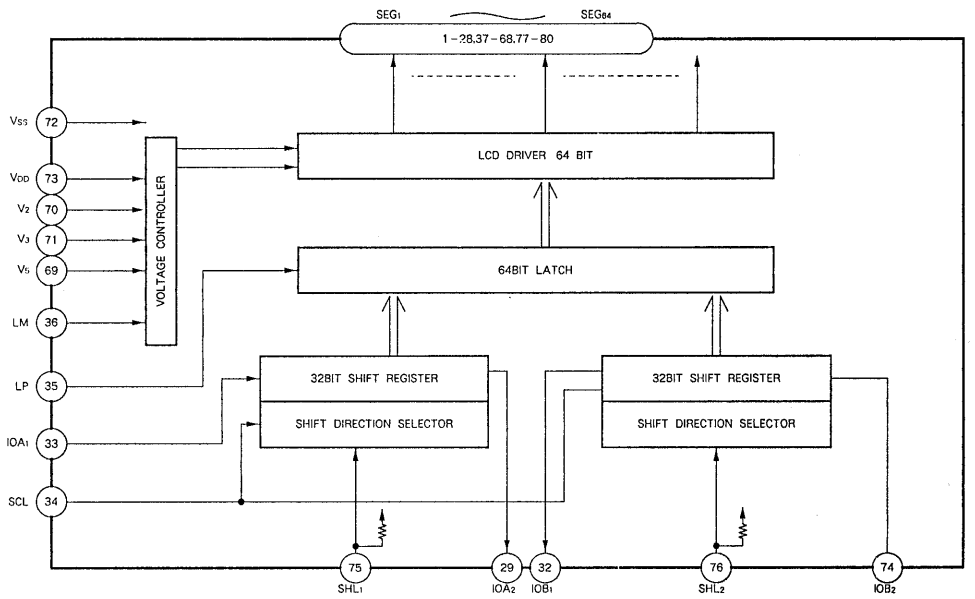

IC804 SED1210F1G

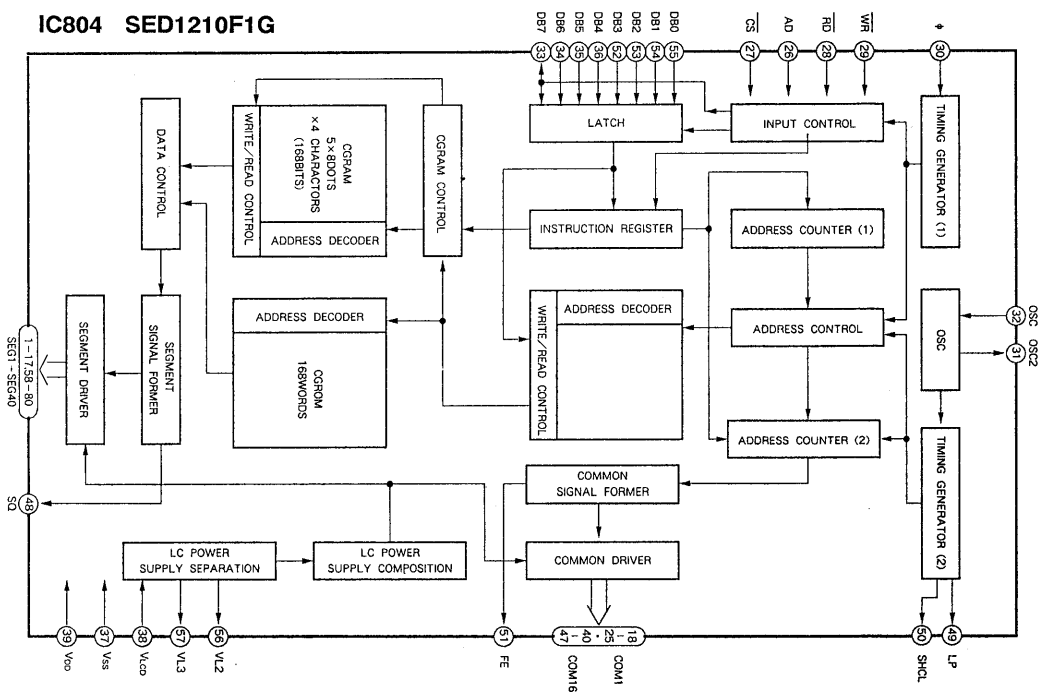

IC805 μPD7225GB-3B7

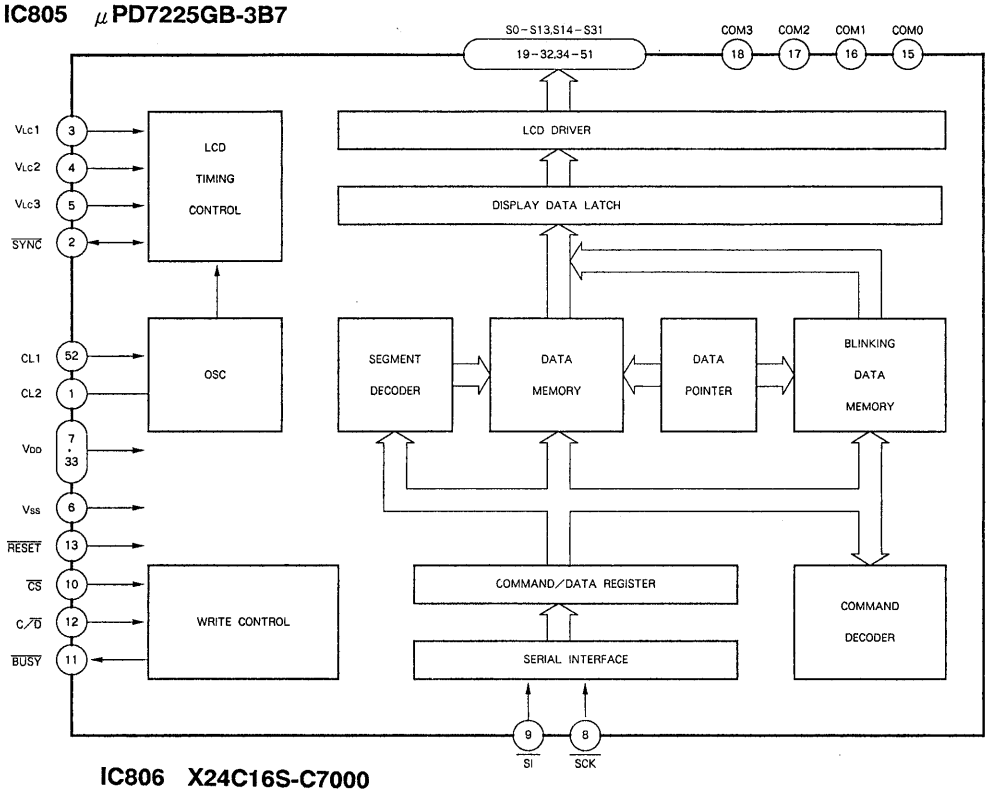

IC806 X24C16S-C7000

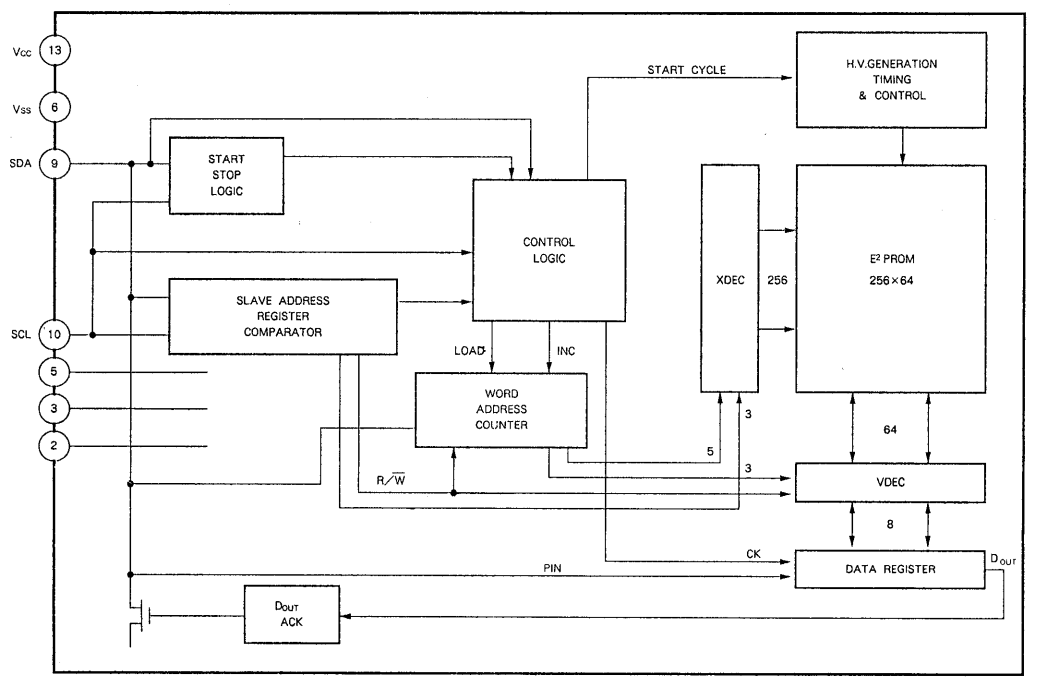

IC812 RF5RD501AC IC817 RF5RD301A

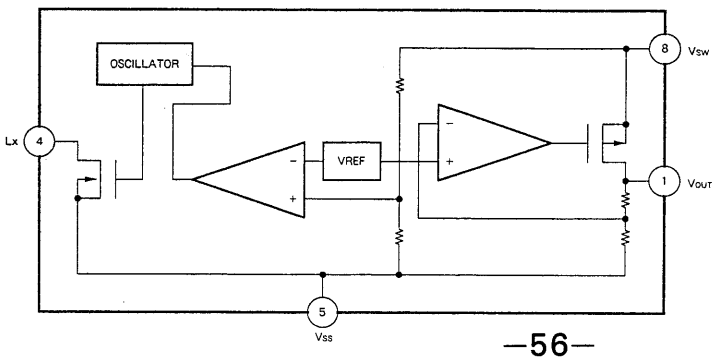

- **LCD Internal Connection**

LCD801

COMMON

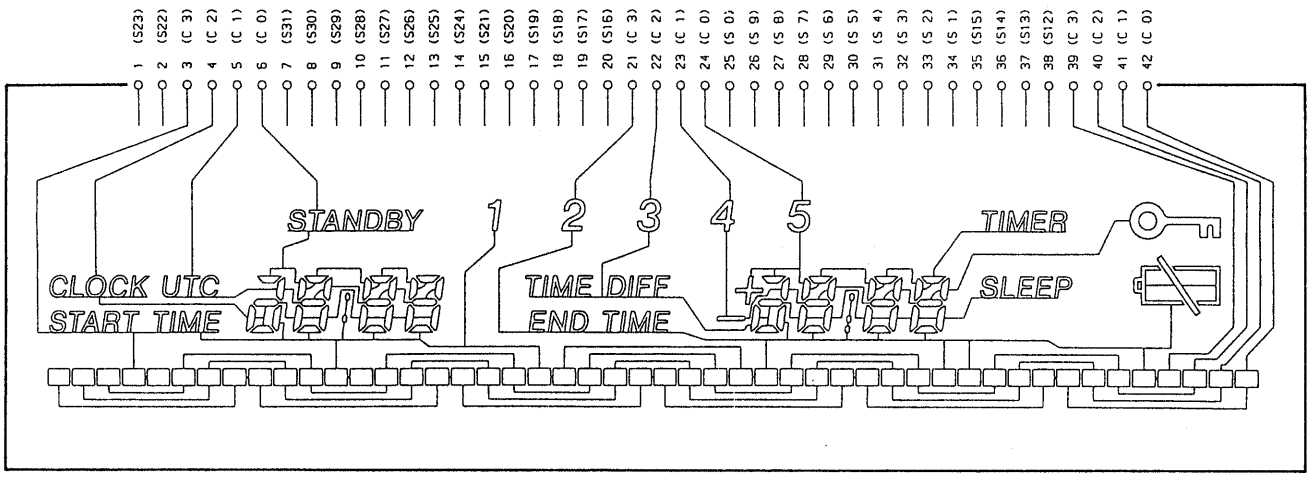

SEGMENT

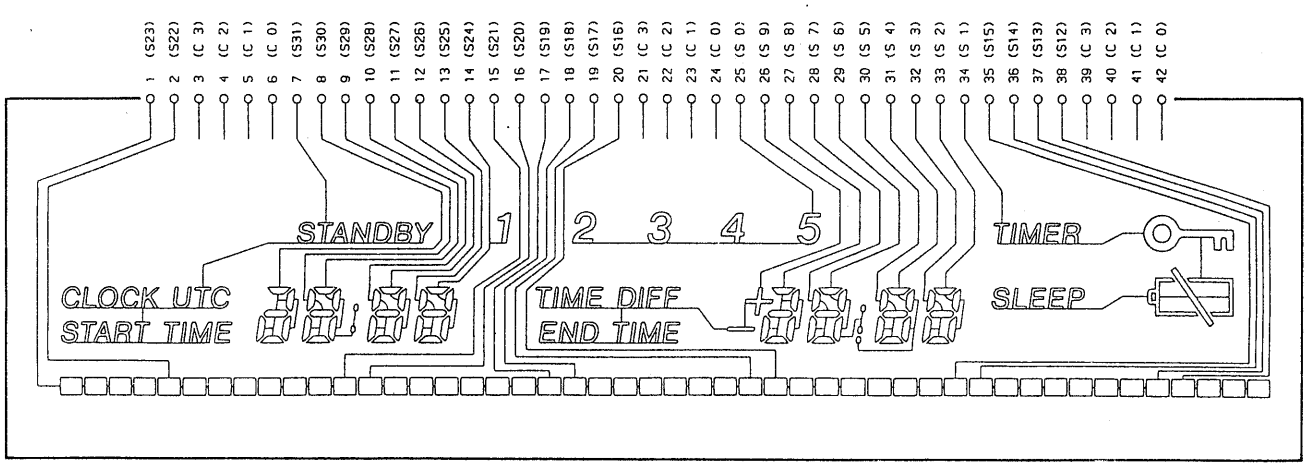

LCD802

COMMON

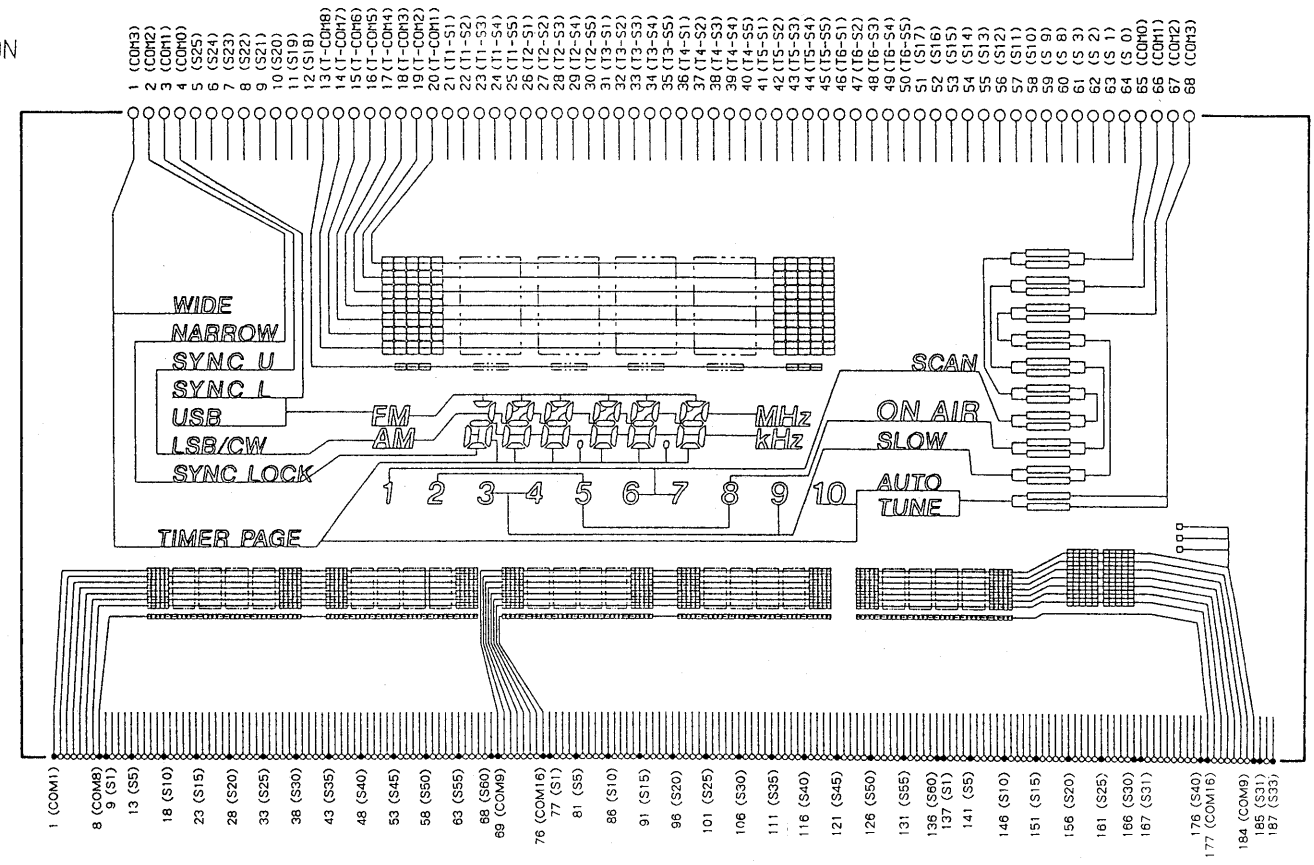

SEGMENT

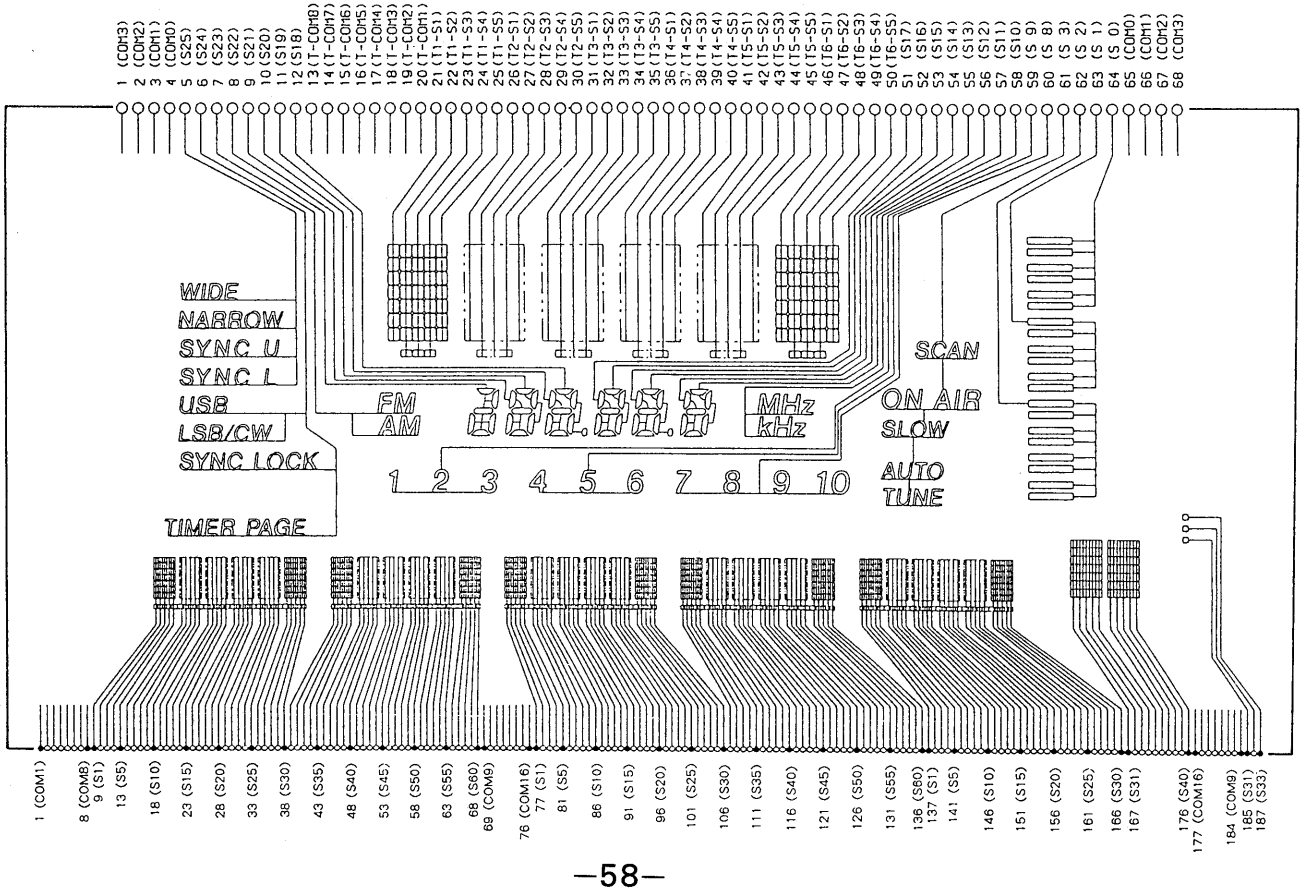

SECTION 5
EXPLODED VIEWS

NOTE:

- -XX and -X mean standardized parts, so they may have some difference from the original one.
- Color Indication of Appearance Parts Example:
  KNOB, BALANCE (WHITE) . . . (RED)
  ↑ Parts Color ↑ Cabinet's Color
- Items marked "*" are not stocked since they are seldom required for routine service. Some delay should be anticipated when ordering these items.
- The mechanical parts with no reference number in the exploded views are not supplied.
- Hardware (# mark) list is given in the last of this parts list.
- EA: Saudi Arabia
  IT: Italian
  AE: AEP
  AU: Australian
  FR: French
  AE4: Germany

(1) CABINET SECTION

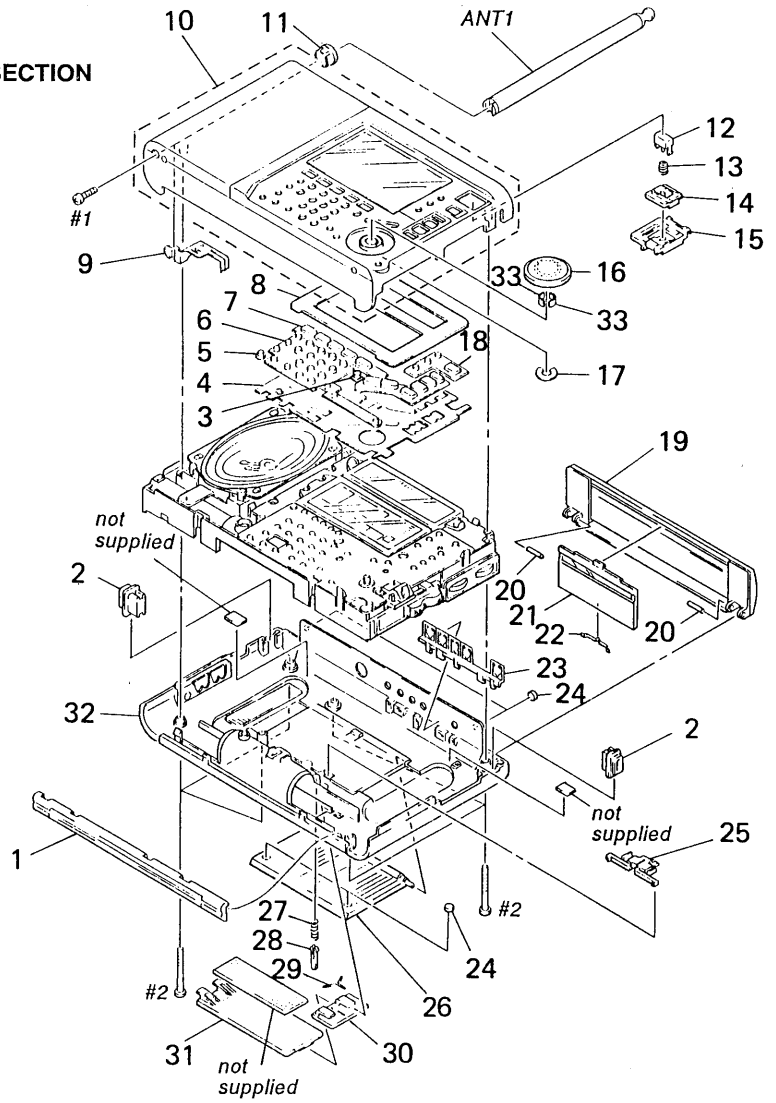

Ref. No.	Part No.	Description	Remark
1	3-368-602-01	FOOT, RUBBER	
2	3-368-587-01	CATCHER (BELT)	
3	3-368-577-01	BUTTON (EDIT)	
4	3-368-621-01	RETAINER, BUTTON	
5	3-368-576-01	BUTTON (LAMP)	
6	3-368-619-01	BUTTON (C)	
7	3-368-618-01	BUTTON (B)	
8	3-368-574-01	PLATE, BACK	
9	* 3-368-607-01	PLATE (B), CONTACT, ANTENNA	
10	X-3363-650-1	CABINET (FRONT) ASSY (3EA)	
10	X-3363-036-1	CABINET (FRONT) ASSY (EXCEPT 3EA)	
11	3-368-578-01	RING (A), ORNAMENTAL	
12	3-368-614-01	BUTTON (POWER)	
13	3-893-862-01	SPRING, COMPRESSION	
14	3-368-615-01	KNOB (POWER)	
15	3-368-616-01	RETAINER (POWER)	
16	X-3363-037-1	KNOB (R E) ASSY	
17	3-368-622-01	WASHER, SLIT	
18	3-368-617-01	BUTTON (A)	
19	* X-3363-035-1	LID ASSY, UPPER (2AE2, 2AE4)	
19	* X-3363-649-1	LID ASSY, UPPER (4IT, 3EA)	
19	X-3363-393-1	LID ASSY, UPPER (US, CA, 1AE1, 1AE2, 1UK, 1E2, 1E4, 1AU, 1FR)	
20	3-368-620-01	PIN (UPPER LID)	
21	X-3363-034-1	CURSOR ASSY	
22	3-368-605-01	SPRING (CURSOE), LEAF	
23	3-368-584-01	BUTTON (TIMER SET)	
24	3-368-590-01	CUSHION (A)	
25	3-368-612-01	SLIDER (STAND LOCK)	
26	3-368-600-01	STAND	
27	3-372-283-01	SPRING, COMPRESSION	
28	3-368-586-01	PIN, LIFT	
29	3-368-593-01	SPRING (BATTERY)	
30	3-368-597-01	KNOB (BATTERY)	
31	3-368-596-01	LID, BATTERY CASE	
32	3-368-628-01	LID, REAR, CABINET	
33	3-371-909-01	CUSHION (R. E)	
ANT1	1-501-505-11	ANTENNA, TELESCOPIC	

REVISED

(2) CHASSIS SECTION

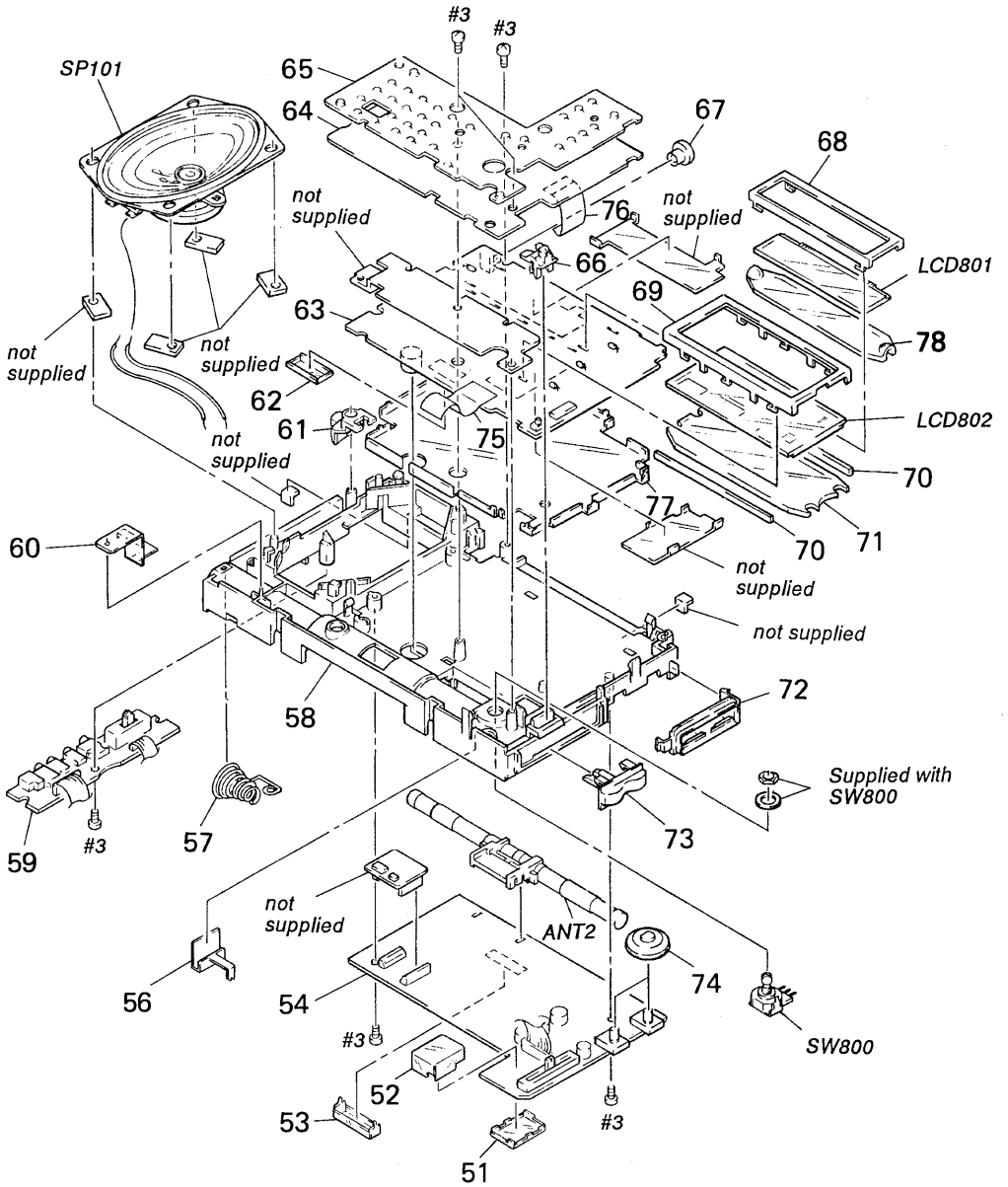

Ref. No.	Part No.	Description	Remark
51	* 3-368-626-01	CASE (D), SHIELD	
52	* 3-368-625-01	CASE (C), SHIELD	
53	* 3-368-624-01	CASE (B), SHIELD	
54	* A-3679-241-A	SIGNAL BOARD, COMPLETE (EXCEPT 1UK)	
54	* A-3679-283-A	SIGNAL BOARD, COMPLETE (1UK)	
56	3-368-589-01	TERMINAL, BATTERY	
57	3-368-588-01	SPRING, BATTERY COIL	
58	* 3-368-627-01	CHASSIS	
59	* A-3679-244-A	JACK BOARD, COMPLETE (EXCEPT 1UK)	
59	* A-3679-286-A	JACK BOARD, COMPLETE (1UK)	
60	* 3-368-606-01	PLATE (A), CONTACT, ANTENNA	
61	3-368-603-01	KNOB (ATT)	
62	* 3-368-592-01	CASE (A), SHIELD	
63	* A-3679-243-A	MICROCOMPUTER BOARD, COMPLETE (EXCEPT 1UK)	
63	* A-3679-285-A	MICROCOMPUTER BOARD, COMPLETE (1UK)	

Ref. No.	Part No.	Description	Remark
64	* 1-640-222-11	KEY BOARD	
65	1-572-756-11	SWITCH, KEY RUBBER(S810-S847)	
66	3-368-604-01	KNOB (S/F)	
67	3-368-581-01	KNOB (LCD)	
68	* 3-368-570-01	HOLDER (LCD801)	
69	* 3-368-571-01	HOLDER (LCD802)	
70	* 1-535-903-11	CONDUCTIVE BOARD, CONNECTION	
71	* 3-368-573-01	CHIP (B), LIGHT GUIDE	
72	3-368-583-01	COVER (TONE)	
73	3-368-601-01	KNOB (VOL)	
74	3-368-582-01	KNOB (TONE)	
75	1-640-354-11	SIGNAL FLEXIBLE BOARD	
76	* 1-640-353-11	KEY FLEXIBLE BOARD	
77	* 3-368-591-01	PLATE (LCD), SHIELD	
78	* 3-368-572-01	CHIP (A), LIGHT GUIDE	
ANT2	1-402-557-11	ANTENNA, FERRITE-ROD	
SP101	1-544-498-11	SPEAKER	
SW800	1-466-537-11	ENCODER, ROTARY	
LCD801	1-809-368-11	DISPLAY PANEL, LIQUID CRYSTAL	
LCD802	1-809-367-11	DISPLAY PANEL, LIQUID CRYSTAL	

SECTION 6
ELECTRICAL PARTS LIST

JACK

NOTE:

- Due to standardization, replacements in the parts list may be different from the parts specified in the diagrams or the components used on the set.
- -XX and -X mean standardized parts, so they may have some difference from the original one.
- RESISTORS
  All resistors are in ohms.
  METAL: Metal-film resistor
  METAL OXIDE: Metal Oxide-film resistor
  F: nonflammable
- Items marked "*" are not stocked since they are seldom required for routine service. Some delay should be anticipated when ordering these items.
- SEMICONDUCTORS
  In each case, u: μ, for example:
  uA...: μA..., uPA...: μPA...,
  uPB...: μPB..., uPC...: μPC...,
  uPD...: μPD...
- CAPACITORS
  uF: μF
- COILS
  uH: μH

The components identified by mark ⚠ or dotted line with mark ⚠ are critical for safety.
Replace only with part number specified.

Les composants identifiés par une marque ⚠ sont critiques pour la sécurité.
Ne les remplacer que par une pièce portant le neméro spécifié.

When including parts by reference number, please include the board name.

Ref. No.	Part No.	Description				Remark
	* A-3679-244-A	JACK BOARD, COMPLETE (EXCEPT 1UK)				
	* A-3679-286-A	JACK BOARD, COMPLETE (1UK)				
		**********				
		< CAPACITOR >				
C601	1-163-113-00	CERAMIC CHIP	68PF	5%	50V	
C602	1-163-125-00	CERAMIC CHIP	220PF	5%	50V	
C603	1-164-232-11	CERAMIC CHIP	0.01uF		50V	
C604	1-164-232-11	CERAMIC CHIP	0.01uF		50V	
C605	1-163-091-00	CERAMIC CHIP	8PF		50V	
C606	1-163-087-00	CERAMIC CHIP	4PF		50V	
C607	1-164-232-11	CERAMIC CHIP	0.01uF		50V	
C608	1-164-232-11	CERAMIC CHIP	0.01uF		50V	
C609	1-164-232-11	CERAMIC CHIP	0.01uF		50V	
C610	1-164-232-11	CERAMIC CHIP	0.01uF		50V	
C611	1-164-232-11	CERAMIC CHIP	0.01uF		50V	
C612	1-164-232-11	CERAMIC CHIP	0.01uF		50V	
		< CONNECTOR >				
CN601	* 1-564-708-11	PIN, CONNECTOR (SMALL TYPE) 6P				
CN602	* 1-564-713-11	PIN, CONNECTOR (SMALL TYPE) 11P				
		< DIODE >				
D601	8-719-800-76	DIODE	1SS226			
D602	8-719-800-76	DIODE	1SS226			
D603	8-719-800-76	DIODE	1SS226			
D604	8-719-123-79	DIODE	1SS279			
		< JACK >				
J601	1-573-178-11	JACK (AM EXT ANT)				
J602	1-563-280-21	JACK (TAPE REMOTE)				
J603	1-563-280-21	JACK (TAPE LINE OUT)				
J604	1-573-177-11	JACK (EARPHONES)				
J705	1-573-180-11	JACK, DC (DC IN 6V)				
		< COIL >				
L601	1-410-987-11	INDUCTOR CHIP	0.33uH			
L602	1-410-393-11	INDUCTOR CHIP	100uH			
L603	1-412-011-31	INDUCTOR CHIP	27uH			
L604	1-410-997-31	INDUCTOR CHIP	2.2uH			
L605	1-410-997-31	INDUCTOR CHIP	2.2uH			
L606	1-410-997-31	INDUCTOR CHIP	2.2uH			
L607	1-407-882-00	COIL				
L608	1-407-882-00	COIL				
L609	1-410-997-31	INDUCTOR CHIP	2.2uH			
L610	1-410-985-11	INDUCTOR CHIP	0.22uH			
L611	1-410-997-41	INDUCTOR CHIP	2.2uH			
		< TRANSISTOR >				
Q601	8-729-904-87	TRANSISTOR	2SB1197K-R			
Q602	8-729-901-00	TRANSISTOR	DTC124EK			
Q603	8-729-116-64	TRANSISTOR	2SK508-K51			
		< RESISTOR >				
R601	1-216-081-00	METAL CHIP	22K	5%	1/10W	
R602	1-216-065-00	METAL CHIP	4.7K	5%	1/10W	
R603	1-216-057-00	METAL CHIP	2.2K	5%	1/10W	
R604	1-216-045-00	METAL CHIP	680	5%	1/10W	
R605	1-216-021-00	METAL CHIP	68	5%	1/10W	
R606	1-216-057-00	METAL CHIP	2.2K	5%	1/10W	
R651	1-216-025-00	METAL CHIP	100	5%	1/10W	
R652	1-216-025-00	METAL CHIP	100	5%	1/10W	
R653	1-216-081-00	METAL CHIP	22K	5%	1/10W	
R654	1-216-025-00	METAL CHIP	100	5%	1/10W	
R655	1-216-041-00	METAL CHIP	470	5%	1/10W	
R656	1-216-017-00	METAL CHIP	47	5%	1/10W	
R657	1-216-017-00	METAL CHIP	47	5%	1/10W	
R658	1-216-097-00	METAL CHIP	100K	5%	1/10W	
R659	1-216-073-00	METAL CHIP	10K	5%	1/10W	

JACK | KEY | KEY FLEXIBLE | MICROCOMPUTER | SIGNAL FLEXIBLE

Ref. No.	Part No.	Description				Remark
R660	1-216-041-00	METAL CHIP	470	5%	1/10W	
R661	1-216-041-00	METAL CHIP	470	5%	1/10W	
R662	1-216-033-00	METAL CHIP	220	5%	1/10W	
R663	1-216-025-00	METAL CHIP	100	5%	1/10W	
R664	1-216-049-00	METAL CHIP	1K	5%	1/10W	
R665	1-216-017-00	METAL CHIP	47	5%	1/10W	
R666	1-216-097-00	METAL CHIP	100K	5%	1/10W	
R667	1-216-065-00	METAL CHIP	4.7K	5%	1/10W	
R668	1-216-033-00	METAL CHIP	220	5%	1/10W	
		< SWITCH >				
SW601	1-552-574-21	SWITCH, SLIDE (SENS)				

****

* 1-640-222-11 KEY BOARD
****

1-640-353-11 KEY FLEXIBLE BOARD
****

< SWITCH >

S809	1-553-977-00	SWITCH, SLIDE (9K/10K)
S810	1-572-756-11	SWITCH, KEY RUBBER (SLEEP)
S811	1-572-756-11	SWITCH, KEY RUBBER (LIGHT)
S812	1-572-756-11	SWITCH, KEY RUBBER (TIMER STANDBY)
S813	1-572-756-11	SWITCH, KEY RUBBER (KEY PROTECT)
S814	1-572-756-11	SWITCH, KEY RUBBER (0)
S815	1-572-756-11	SWITCH, KEY RUBBER (1)
S816	1-572-756-11	SWITCH, KEY RUBBER (2)
S817	1-572-756-11	SWITCH, KEY RUBBER (3)
S818	1-572-756-11	SWITCH, KEY RUBBER (4)
S819	1-572-756-11	SWITCH, KEY RUBBER (5)
S820	1-572-756-11	SWITCH, KEY RUBBER (6)
S821	1-572-756-11	SWITCH, KEY RUBBER (7)
S822	1-572-756-11	SWITCH, KEY RUBBER (QUICK PAGE)
S823	1-572-756-11	SWITCH, KEY RUBBER (8)
S824	1-572-756-11	SWITCH, KEY RUBBER (9)
S825	1-572-756-11	SWITCH, KEY RUBBER (AM MODE)
S826	1-572-756-11	SWITCH, KEY RUBBER (SYNC)
S827	1-572-756-11	SWITCH, KEY RUBBER (SSB)
S828	1-572-756-11	SWITCH, KEY RUBBER (AM FAST/SLOW)
S829	1-572-756-11	SWITCH, KEY RUBBER (SCAN/AUTO TUNE)
S830	1-572-756-11	SWITCH, KEY RUBBER (EDIT)
S831	1-572-756-11	SWITCH, KEY RUBBER (TIMER/PAGE)
S832	1-572-756-11	SWITCH, KEY RUBBER (S1)
S833	1-572-756-11	SWITCH, KEY RUBBER (S2)
S834	1-572-756-11	SWITCH, KEY RUBBER (S3)
S835	1-572-756-11	SWITCH, KEY RUBBER (S4)
S836	1-572-756-11	SWITCH, KEY RUBBER (S5)
S837	1-572-756-11	SWITCH, KEY RUBBER (RESERVE)
S838	1-572-756-11	SWITCH, KEY RUBBER (TIMER CHECK/ERASE)
S839	1-572-756-11	SWITCH, KEY RUBBER (ENTER)
S840	1-572-756-11	SWITCH, KEY RUBBER(PAGE FEED INS CHR +)
S841	1-572-756-11	SWITCH, KEY RUBBER(PAGE FEED DEL CHR -)
S842	1-572-756-11	SWITCH, KEY RUBBER (MEMORY FREQ/METER BAND STEP/CURSOR R)
S843	1-572-756-11	SWITCH, KEY RUBBER (MEMORY FREQ/METER BAND STEP/CURSOR L)
S844	1-572-756-11	SWITCH, KEY RUBBER (EXE)
S845	1-572-756-11	SWITCH, KEY RUBBER (AM)
S846	1-572-756-11	SWITCH, KEY RUBBER (FM)
S847	1-572-756-11	SWITCH, KEY RUBBER (METER BAND)

****

* A-3679-243-A MICROCOMPUTER BOARD, COMPLETE (EXCEPT 1UK)
* A-3679-285-A MICROCOMPUTER BOARD, COMPLETE (1UK)
****

1-640-354-11 SIGNAL FLEXIBLE BOARD
****
* 3-368-570-01 HOLDER (LCD801)
* 3-368-591-01 PLATE (LCD), SHIELD
* 3-368-592-01 CASE (A), SHIELD

< CAPACITOR >

C801	1-135-157-21	TANTALUM CHIP	10uF	20%	6.3V
C802	1-135-161-21	TANTALUM CHIP	22uF	10%	6.3V
C803	1-135-156-21	TANTALUM CHIP	6.8uF	10%	6.3V
C804	1-135-097-21	TANTALUM CHIP	15uF	10%	10V
C805	1-135-161-21	TANTALUM CHIP	22uF	10%	6.3V
C806	1-135-156-21	TANTALUM CHIP	6.8uF	10%	6.3V
C807	1-135-156-21	TANTALUM CHIP	6.8uF	10%	6.3V
C808	1-135-156-21	TANTALUM CHIP	6.8uF	10%	6.3V
C809	1-135-156-21	TANTALUM CHIP	6.8uF	10%	6.3V
C810	1-135-156-21	TANTALUM CHIP	6.8uF	10%	6.3V
C811	1-135-156-21	TANTALUM CHIP	6.8uF	10%	6.3V
C812	1-135-157-21	TANTALUM CHIP	10uF	20%	6.3V
C813	1-164-004-11	CERAMIC CHIP	0.1uF	10%	25V
C814	1-163-077-00	CERAMIC CHIP	0.1uF	10%	25V
C815	1-164-004-11	CERAMIC CHIP	0.1uF	10%	25V
C816	1-164-004-11	CERAMIC CHIP	0.1uF	10%	25V
C817	1-164-004-11	CERAMIC CHIP	0.1uF	10%	25V
C818	1-125-688-11	ELECT(BLOCK)	0.047F		6.3V
C819	1-164-346-11	CERAMIC CHIP	1uF		16V
C820	1-164-346-11	CERAMIC CHIP	1uF		16V
C821	1-162-942-11	CERAMIC CHIP	12PF	5%	50V
C822	1-162-930-11	CERAMIC CHIP	1PF	0.25PF	50V
C823	1-162-942-11	CERAMIC CHIP	12PF	5%	50V
C824	1-162-930-11	CERAMIC CHIP	1PF	0.25PF	50V

MICROCOMPUTER

Ref. No.	Part No.	Description			Remark
C825	1-163-117-00	CERAMIC CHIP	100PF	5%	50V
C826	1-162-953-11	CERAMIC CHIP	100PF	5%	50V
C827	1-164-346-11	CERAMIC CHIP	1uF		16V
C831	1-162-970-11	CERAMIC CHIP	0.01uF	10%	25V
C832	1-162-970-11	CERAMIC CHIP	0.01uF	10%	25V
C833	1-162-970-11	CERAMIC CHIP	0.01uF	10%	25V
C835	1-162-946-11	CERAMIC CHIP	27PF	5%	50V
C836	1-162-945-11	CERAMIC CHIP	22PF	5%	50V
C837	1-135-091-00	TANTALUM CHIP	1uF	20%	16V
C838	1-162-953-11	CERAMIC CHIP	100PF	5%	50V
C839	1-162-953-11	CERAMIC CHIP	100PF	5%	50V
C840	1-162-953-11	CERAMIC CHIP	100PF	5%	50V
C841	1-162-953-11	CERAMIC CHIP	100PF	5%	50V
C842	1-162-953-11	CERAMIC CHIP	100PF	5%	50V
C843	1-162-953-11	CERAMIC CHIP	100PF	5%	50V
C844	1-162-953-11	CERAMIC CHIP	100PF	5%	50V
C845	1-162-953-11	CERAMIC CHIP	100PF	5%	50V
C846	1-162-961-11	CERAMIC CHIP	330PF	10%	50V
C847	1-162-961-11	CERAMIC CHIP	330PF	10%	50V
C848	1-162-970-11	CERAMIC CHIP	0.01uF	10%	25V
C849	1-162-964-11	CERAMIC CHIP	0.001uF	10%	50V
C850	1-162-953-11	CERAMIC CHIP	100PF	5%	50V
C851	1-162-953-11	CERAMIC CHIP	100PF	5%	50V
C852	1-162-953-11	CERAMIC CHIP	100PF	5%	50V
C853	1-162-970-11	CERAMIC CHIP	0.01uF	10%	25V
C854	1-162-970-11	CERAMIC CHIP	0.01uF	10%	25V
C855	1-162-970-11	CERAMIC CHIP	0.01uF	10%	25V
C856	1-162-970-11	CERAMIC CHIP	0.01uF	10%	25V
C857	1-135-148-21	TANTAL. CHIP	1.5uF	20%	10V
C858	1-163-077-00	CERAMIC CHIP	0.1uF	10%	25V
C859	1-162-970-11	CERAMIC CHIP	0.01uF	10%	25V
C860	1-163-077-00	CERAMIC CHIP	0.1uF	10%	25V
C861	1-162-964-11	CERAMIC CHIP	0.001uF	10%	50V
C862	1-162-964-11	CERAMIC CHIP	0.001uF	10%	50V
C863	1-162-964-11	CERAMIC CHIP	0.001uF	10%	50V
C864	1-162-964-11	CERAMIC CHIP	0.001uF	10%	50V
C865	1-162-964-11	CERAMIC CHIP	0.001uF	10%	50V
C866	1-162-970-11	CERAMIC CHIP	0.01uF	10%	25V
		< CONNECTOR >			
CN801	1-573-206-21	CONNECTOR, FPC (PC BOARD) 15P			
CN802	1-573-181-11	HOUSING, CONNECTOR 3P			
		< TRIMMER >			
CT801	1-141-345-11	CAP, VAR, TRIMMER (CHIP TYPE)			
CT802	1-141-345-11	CAP, VAR, TRIMMER (CHIP TYPE)			

Ref. No.	Part No.	Description		Remark
		< DIODE >		
D802	8-719-951-22	DIODE	IMN10	
D803	8-719-951-22	DIODE	IMN10	
D804	8-719-941-86	DIODE	DAN202U	
D805	8-719-941-86	DIODE	DAN202U	
D806	8-719-988-82	DIODE	RB715F	
D807	8-719-951-22	DIODE	IMN10	
D808	8-719-988-82	DIODE	RB715F	
D809	8-719-938-72	DIODE	SB01-05CP	
D810	8-719-941-86	DIODE	DAN202U	
D811	8-719-941-86	DIODE	DAN202U	
D812	8-719-938-72	DIODE	SB01-05CP	
D813	8-719-989-49	DIODE	SLP-389F-51-AB	
D814	8-719-989-49	DIODE	SLP-389F-51-AB	
D815	8-719-989-49	DIODE	SLP-389F-51-AB	
D816	8-719-989-49	DIODE	SLP-389F-51-AB	
D817	8-719-989-49	DIODE	SLP-389F-51-AB	
D818	8-719-989-49	DIODE	SLP-389F-51-AB	
D819	8-719-941-86	DIODE	DAN202U	
		< IC >		
IC801	8-759-636-82	IC	M50933-124FP	
IC802	8-759-636-81	IC	M37450M8-456FP	
IC803	8-759-514-65	IC	NJU6417BF	
IC804	8-759-514-66	IC	SED1210F1G	
IC805	8-759-153-90	IC	uPD7225GB-3B7	
IC806	8-759-507-13	IC	X24C16S-C7000	
IC807	8-759-925-74	IC	SN74HC04ANS	
IC808	8-759-927-46	IC	SN74HC00ANS	
IC809	8-759-927-46	IC	SN74HC00ANS	
IC811	8-759-939-41	IC	S-81230AG-RB-S	
IC812	8-759-503-44	IC	RF5RD501C	
IC814	8-759-519-46	IC	S-80730AN-DT-S	
IC815	8-759-514-72	IC	S-80725AL-AN	
IC816	8-759-008-36	IC	MC74HC4049F	
IC817	8-759-514-67	IC	RF5RD301A	
		< COIL >		
L801	1-412-637-51	INDUCTOR	330uH	
L802	1-410-793-51	INDUCTOR CHIP	2.2mH	
L803	1-410-793-51	INDUCTOR CHIP	2.2mH	
L804	1-410-793-51	INDUCTOR CHIP	2.2mH	
		< LIQUID CRYSTAL DISPLAY >		
LCD801	1-809-368-11	DISPLAY PANEL, LIQUID CRYSTAL		
LCD802	1-809-367-11	DISPLAY PANEL, LIQUID CRYSTAL		

MICROCOMPUTER

Ref. No.	Part No.	Description				Remark
		< TRANSISTOR >				
Q801	8-729-921-73	TRANSISTOR	2SD1781K-QR			
Q802	8-729-924-14	TRANSISTOR	DTA124TU			
Q803	8-729-905-61	TRANSISTOR	DTC124EU			
Q804	8-729-920-63	TRANSISTOR	DTA123EK			
Q805	8-729-144-98	TRANSISTOR	2SK1580			
Q806	8-729-144-98	TRANSISTOR	2SK1580			
Q807	8-729-144-98	TRANSISTOR	2SK1580			
Q808	8-729-117-32	TRANSISTOR	2SC4177-L6			
Q810	8-729-924-14	TRANSISTOR	DTA124TU			
Q811	8-729-905-61	TRANSISTOR	DTC124EU			
Q812	8-729-905-61	TRANSISTOR	DTC124EU			
		< RESISTOR >				
R801	1-216-821-11	METAL CHIP	1K	5%	1/16W	
R802	1-216-803-11	METAL CHIP	33	5%	1/16W	
R804	1-216-863-11	METAL GLAZE	3.3M	5%	1/16W	
R805	1-216-851-11	METAL CHIP	330K	5%	1/16W	
R806	1-216-857-11	METAL CHIP	1M	5%	1/16W	
R807	1-216-821-11	METAL CHIP	1K	5%	1/16W	
R808	1-216-845-11	METAL CHIP	100K	5%	1/16W	
R809	1-216-833-11	METAL CHIP	10K	5%	1/16W	
R810	1-216-833-11	METAL CHIP	10K	5%	1/16W	
R811	1-216-809-11	METAL CHIP	100	5%	1/16W	
R812	1-216-821-11	METAL CHIP	1K	5%	1/16W	
R813	1-216-821-11	METAL CHIP	1K	5%	1/16W	
R814	1-216-833-11	METAL CHIP	10K	5%	1/16W	
R815	1-216-833-11	METAL CHIP	10K	5%	1/16W	
R816	1-216-833-11	METAL CHIP	10K	5%	1/16W	
R817	1-216-821-11	METAL CHIP	1K	5%	1/16W	
R818	1-216-821-11	METAL CHIP	1K	5%	1/16W	
R819	1-216-821-11	METAL CHIP	1K	5%	1/16W	
R820	1-216-821-11	METAL CHIP	1K	5%	1/16W	
R821	1-216-821-11	METAL CHIP	1K	5%	1/16W	
R823	1-216-001-00	METAL CHIP	10	5%	1/10W	
R824	1-216-833-11	METAL CHIP	10K	5%	1/16W	
R825	1-216-001-00	METAL CHIP	10	5%	1/10W	
R826	1-216-833-11	METAL CHIP	10K	5%	1/16W	
R827	1-216-857-11	METAL CHIP	1M	5%	1/16W	
R828	1-216-821-11	METAL CHIP	1K	5%	1/16W	
R829	1-216-833-11	METAL CHIP	10K	5%	1/16W	
R830	1-216-821-11	METAL CHIP	1K	5%	1/16W	
R831	1-216-849-11	METAL CHIP	220K	5%	1/16W	
R832	1-216-845-11	METAL CHIP	100K	5%	1/16W	
R833	1-216-027-00	METAL CHIP	120	5%	1/10W	
R834	1-216-027-00	METAL CHIP	120	5%	1/10W	
R835	1-216-027-00	METAL CHIP	120	5%	1/10W	
R836	1-216-027-00	METAL CHIP	120	5%	1/10W	
R837	1-216-027-00	METAL CHIP	120	5%	1/10W	
R838	1-216-027-00	METAL CHIP	120	5%	1/10W	
R839	1-216-845-11	METAL CHIP	100K	5%	1/16W	
R840	1-216-001-00	METAL CHIP	10	5%	1/10W	
R841	1-216-803-11	METAL CHIP	33	5%	1/16W	
R842	1-216-001-00	METAL CHIP	10	5%	1/10W	
R843	1-216-013-00	METAL CHIP	33	5%	1/10W	
R844	1-216-815-11	METAL CHIP	330	5%	1/16W	
R845	1-216-821-11	METAL CHIP	1K	5%	1/16W	
R846	1-216-833-11	METAL CHIP	10K	5%	1/16W	
R847	1-216-851-11	METAL CHIP	330K	5%	1/16W	
R848	1-216-821-11	METAL CHIP	1K	5%	1/16W	
R849	1-216-815-11	METAL CHIP	330	5%	1/16W	
R850	1-216-838-11	METAL CHIP	27K	5%	1/16W	
R851	1-216-848-11	METAL CHIP	180K	5%	1/16W	
R852	1-216-848-11	METAL CHIP	180K	5%	1/16W	
R853	1-216-821-11	METAL CHIP	1K	5%	1/16W	
R854	1-216-833-11	METAL CHIP	10K	5%	1/16W	
R855	1-216-827-11	METAL CHIP	3.3K	5%	1/16W	
R856	1-216-853-11	METAL CHIP	470K	5%	1/16W	
R857	1-216-853-11	METAL CHIP	470K	5%	1/16W	
R858	1-216-853-11	METAL CHIP	470K	5%	1/16W	
R859	1-216-857-11	METAL CHIP	1M	5%	1/16W	
R860	1-216-833-11	METAL CHIP	10K	5%	1/16W	
R861	1-216-857-11	METAL CHIP	1M	5%	1/16W	
R862	1-216-857-11	METAL CHIP	1M	5%	1/16W	
R863	1-216-857-11	METAL CHIP	1M	5%	1/16W	
R864	1-216-857-11	METAL CHIP	1M	5%	1/16W	
R865	1-216-833-11	METAL CHIP	10K	5%	1/16W	
R866	1-216-833-11	METAL CHIP	10K	5%	1/16W	
R867	1-216-809-11	METAL CHIP	100	5%	1/16W	
R868	1-216-838-11	METAL CHIP	27K	5%	1/16W	
R869	1-216-833-11	METAL CHIP	10K	5%	1/16W	
R870	1-216-833-11	METAL CHIP	10K	5%	1/16W	
R871	1-216-833-11	METAL CHIP	10K	5%	1/16W	
R872	1-216-821-11	METAL CHIP	1K	5%	1/16W	
R873	1-216-833-11	METAL CHIP	10K	5%	1/16W	
R874	1-216-845-11	METAL CHIP	100K	5%	1/16W	
R875	1-216-845-11	METAL CHIP	100K	5%	1/16W	
R876	1-216-845-11	METAL CHIP	100K	5%	1/16W	
R877	1-216-833-11	METAL CHIP	10K	5%	1/16W	
R878	1-216-833-11	METAL CHIP	10K	5%	1/16W	
R879	1-216-821-11	METAL CHIP	1K	5%	1/16W	
R880	1-216-809-11	METAL CHIP	100	5%	1/16W	
R881	1-216-821-11	METAL CHIP	1K	5%	1/16W	
R882	1-216-833-11	METAL CHIP	10K	5%	1/16W	
R883	1-216-845-11	METAL CHIP	100K	5%	1/16W	
R884	1-216-845-11	METAL CHIP	100K	5%	1/16W	
R885	1-216-845-11	METAL CHIP	100K	5%	1/16W	
R886	1-216-845-11	METAL CHIP	100K	5%	1/16W	

MICROCOMPUTER SIGNAL

Ref. No.	Part No.	Description	Remark
R887	1-216-845-11	METAL CHIP 100K 5% 1/16W	
R888	1-216-845-11	METAL CHIP 100K 5% 1/16W	
R889	1-216-845-11	METAL CHIP 100K 5% 1/16W	
R890	1-216-845-11	METAL CHIP 100K 5% 1/16W	
R891	1-216-846-11	METAL CHIP 120K 5% 1/16W	
		< NETWORK >	
RB801	1-236-863-21	RES, NETWORK 10KX2	
RB802	1-236-500-11	RES, NETWORK 10KX3	
RB803	1-236-500-11	RES, NETWORK 10KX3	
RB804	1-236-500-11	RES, NETWORK 1KX3	
RB805	1-236-499-11	RES, NETWORK 1KX3	
RB806	1-236-499-11	RES, NETWORK 10KX2	
RB807	1-236-863-21	RES, NETWORK 10KX2	
RB808	1-236-863-21	RES, NETWORK 10KX2	
RB809	1-236-500-11	RES, NETWORK 10KX3	
		< VARIABLE RESISTOR >	
RV801	1-238-772-11	RES, VAR, CARBON (ROTARY) 10K (LCD CONTRAST)	
		< SWITCH >	
S801	1-570-990-11	SWITCH, TACT (LOCAL)	
S802	1-570-990-11	SWITCH, TACT (TIME DIFF)	
S803	1-570-990-11	SWITCH, TACT (TIME/PROGRAM)	
S804	1-570-990-11	SWITCH, TACT (LOCAL TIME/VTC)	
S805	1-570-990-11	SWITCH, TACT (FREE)	
S806	1-571-381-21	SWITCH, TACTIL (REFLOW TYPE) (ON/OFF)	
S807	1-571-754-11	SWITCH, PUSH (1 KEY) (LOCK)	
S808	1-553-977-00	SWITCH, SLIDE (DIAL LOCK)	
S848	1-570-990-11	SWITCH, TACT (RESET)	
		< VIBRATOR, CERAMIC >	
X801	1-567-098-41	VIBRATOR, CRYSTAL 32.768KHz	
X802	1-577-703-21	VIBRATOR, CERAMIC 2.0MHz	
X803	1-577-703-21	VIBRATOR, CERAMIC 2.0MHz	

****

* A-3679-241-A SIGNAL BOARD, COMPLETE (EXCEPT 1UK)
* A-3679-283-A SIGNAL BOARD, COMPLETE (1UK)

****

* 3-368-624-01 CASE (B), SHIELD
* 3-368-625-01 CASE (C), SHIELD
* 3-368-626-01 CASE (D), SHIELD

Ref. No.	Part No.	Description	Remark
		< ANTENNA >	
ANT2	1-402-557-11	ANTENNA, FERRITE-ROD	
		< CAPACITOR >	
C1	1-163-091-00	CERAMIC CHIP 8PF	50V
C2	1-164-232-11	CERAMIC CHIP 0.01uF	50V
C3	1-164-232-11	CERAMIC CHIP 0.01uF	50V
C4	1-164-232-11	CERAMIC CHIP 0.01uF	50V
C5	1-164-232-11	CERAMIC CHIP 0.01uF	50V
C6	1-164-232-11	CERAMIC CHIP 0.01uF	50V
C7	1-164-232-11	CERAMIC CHIP 0.01uF	50V
C8	1-164-232-11	CERAMIC CHIP 0.01uF	50V
C9	1-164-232-11	CERAMIC CHIP 0.01uF	50V
C10	1-164-232-11	CERAMIC CHIP 0.01uF	50V (EXCEPT 1UK)
C11	1-164-232-11	CERAMIC CHIP 0.01uF	50V
C12	1-163-125-00	CERAMIC CHIP 220PF 5%	50V
C13	1-163-107-00	CERAMIC CHIP 39PF 5%	50V
C14	1-163-125-00	CERAMIC CHIP 220PF 5%	50V
C16	1-163-129-00	CERAMIC CHIP 330PF 5%	50V
C17	1-163-113-00	CERAMIC CHIP 68PF 5%	50V
C18	1-163-137-00	CERAMIC CHIP 680PF 5%	50V
C19	1-164-232-11	CERAMIC CHIP 0.01uF	50V
C20	1-163-139-00	CERAMIC CHIP 820PF 5%	50V
C21	1-163-117-00	CERAMIC CHIP 100PF 5%	50V
C22	1-163-012-00	CERAMIC CHIP 0.0018uF 10%	50V
C23	1-164-232-11	CERAMIC CHIP 0.01uF	50V
C24	1-163-145-00	CERAMIC CHIP 0.0015uF 5%	50V
C25	1-163-127-00	CERAMIC CHIP 270PF 5%	50V
C26	1-163-014-00	CERAMIC CHIP 0.0027uF 10%	50V
C28	1-163-017-00	CERAMIC CHIP 0.0047uF 5%	50V
C29	1-163-129-00	CERAMIC CHIP 330PF 5%	50V
C30	1-163-016-00	CERAMIC CHIP 0.0039uF 10%	50V
C32	1-164-232-11	CERAMIC CHIP 0.01uF	50V
C33	1-164-232-11	CERAMIC CHIP 0.01uF	50V
C34	1-164-232-11	CERAMIC CHIP 0.01uF	50V
C35	1-164-232-11	CERAMIC CHIP 0.01uF	50V
C36	1-164-232-11	CERAMIC CHIP 0.01uF	50V
C37	1-164-232-11	CERAMIC CHIP 0.01uF	50V
C39	1-164-232-11	CERAMIC CHIP 0.01uF	50V
C40	1-164-232-11	CERAMIC CHIP 0.01uF	50V
C41	1-164-232-11	CERAMIC CHIP 0.01uF	50V
C42	1-164-232-11	CERAMIC CHIP 0.01uF	50V
C43	1-164-232-11	CERAMIC CHIP 0.01uF	50V
C44	1-164-232-11	CERAMIC CHIP 0.01uF	50V
C45	1-163-107-00	CERAMIC CHIP 39PF 5%	50V
C46	1-164-232-11	CERAMIC CHIP 0.01uF	50V
C47	1-164-232-11	CERAMIC CHIP 0.01uF	50V
C48	1-164-232-11	CERAMIC CHIP 0.01uF	50V
C49	1-163-090-00	CERAMIC CHIP 7PF	50V

SIGNAL

Ref. No.	Part No.	Description			Remark
C50	1-163-141-00	CERAMIC CHIP	0.001uF	5%	50V
C51	1-163-141-00	CERAMIC CHIP	0.001uF	5%	50V
C52	1-164-232-11	CERAMIC CHIP	0.01uF		50V
C53	1-163-095-00	CERAMIC CHIP	12PF	5%	50V
C54	1-164-232-11	CERAMIC CHIP	0.01uF		50V
C55	1-164-232-11	CERAMIC CHIP	0.01uF		50V
C56	1-164-232-11	CERAMIC CHIP	0.01uF		50V
C57	1-164-232-11	CERAMIC CHIP	0.01uF		50V
C58	1-164-232-11	CERAMIC CHIP	0.01uF		50V
C59	1-164-232-11	CERAMIC CHIP	0.01uF		50V
C60	1-164-232-11	CERAMIC CHIP	0.01uF		50V
C61	1-164-232-11	CERAMIC CHIP	0.01uF		50V
C62	1-135-155-21	TANTALUM CHIP	4.7uF	10%	10V
C63	1-163-117-00	CERAMIC CHIP	100PF	5%	50V
C64	1-164-004-11	CERAMIC CHIP	0.1uF	10%	25V
C65	1-164-004-11	CERAMIC CHIP	0.1uF	10%	25V
C66	1-164-232-11	CERAMIC CHIP	0.01uF		50V
C67	1-162-638-11	CERAMIC CHIP	1uF		16V
C68	1-162-638-11	CERAMIC CHIP	1uF		16V
C201	1-164-004-11	CERAMIC CHIP	0.1uF	10%	25V
C202	1-164-232-11	CERAMIC CHIP	0.01uF		50V
C203	1-164-004-11	CERAMIC CHIP	0.1uF	10%	25V
C204	1-164-232-11	CERAMIC CHIP	0.01uF		50V
C205	1-126-205-11	ELECT CHIP	47uF	20%	6.3V
C206	1-164-232-11	CERAMIC CHIP	0.01uF		50V
C207	1-164-232-11	CERAMIC CHIP	0.01uF		50V
C208	1-164-232-11	CERAMIC CHIP	0.01uF		50V
C209	1-164-004-11	CERAMIC CHIP	0.1uF	10%	25V
C210	1-164-232-11	CERAMIC CHIP	0.01uF		50V
C211	1-126-205-11	ELECT CHIP	47uF	20%	6.3V
C212	1-164-232-11	CERAMIC CHIP	0.01uF		50V
C213	1-164-232-11	CERAMIC CHIP	0.01uF		50V
C214	1-164-232-11	CERAMIC CHIP	0.01uF		50V
C215	1-163-088-00	CERAMIC CHIP	5PF		50V
C251	1-163-087-00	CERAMIC CHIP	4PF		50V
C252	1-164-232-11	CERAMIC CHIP	0.01uF		50V
C254	1-164-232-11	CERAMIC CHIP	0.01uF		50V
C255	1-164-232-11	CERAMIC CHIP	0.01uF		50V
C256	1-164-232-11	CERAMIC CHIP	0.01uF		50V
C257	1-126-209-11	ELECT CHIP	100uF	20%	4V
C258	1-163-086-00	CERAMIC CHIP	3PF		50V
C259	1-163-085-00	CERAMIC CHIP	2PF		50V
C260	1-164-232-11	CERAMIC CHIP	0.01uF		50V
C261	1-163-123-00	CERAMIC CHIP	180PF	5%	50V
C262	1-163-085-00	CERAMIC CHIP	2PF		50V
C263	1-164-232-11	CERAMIC CHIP	0.01uF		50V
C264	1-164-232-11	CERAMIC CHIP	0.01uF		50V
C265	1-164-232-11	CERAMIC CHIP	0.01uF		50V
C266	1-163-083-00	CERAMIC CHIP	1PF		50V
C267	1-163-091-00	CERAMIC CHIP	8PF		50V
C268	1-164-232-11	CERAMIC CHIP	0.01uF		50V
C269	1-164-232-11	CERAMIC CHIP	0.01uF		50V
C301	1-164-232-11	CERAMIC CHIP	0.01uF		50V
C302	1-164-232-11	CERAMIC CHIP	0.01uF		50V
C303	1-164-232-11	CERAMIC CHIP	0.01uF		50V
C304	1-164-232-11	CERAMIC CHIP	0.01uF		50V
C305	1-164-232-11	CERAMIC CHIP	0.01uF		50V
C306	1-164-232-11	CERAMIC CHIP	0.01uF		50V
C307	1-164-232-11	CERAMIC CHIP	0.01uF		50V
C308	1-126-199-11	ELECT CHIP	6.8uF	20%	35V
C309	1-164-232-11	CERAMIC CHIP	0.01uF		50V
C310	1-124-778-00	ELECT CHIP	22uF	20%	6.3V
C311	1-164-346-11	CERAMIC CHIP	1uF		16V
C312	1-163-107-00	CERAMIC CHIP	39PF	5%	50V
C314	1-126-603-11	ELECT CHIP	4.7uF	20%	35V
C315	1-126-193-11	ELECT	1uF	20%	50V
C316	1-163-095-00	CERAMIC CHIP	12PF	5%	50V
C317	1-163-095-00	CERAMIC CHIP	12PF	5%	50V
C318	1-164-232-11	CERAMIC CHIP	0.01uF		50V
C319	1-164-232-11	CERAMIC CHIP	0.01uF		50V
C320	1-164-232-11	CERAMIC CHIP	0.01uF		50V
C321	1-164-232-11	CERAMIC CHIP	0.01uF		50V
C322	1-164-232-11	CERAMIC CHIP	0.01uF		50V
C323	1-135-167-21	TANTAL. CHIP	68uF	20%	4V
C325	1-163-108-00	CERAMIC CHIP	43PF	5%	50V
C326	1-126-246-11	ELECT CHIP	220uF	20%	4V
C327	1-164-232-11	CERAMIC CHIP	0.01uF		50V
C328	1-164-774-11	FILM CHIP	0.0022uF	5%	16V
C329	1-164-782-11	FILM CHIP	0.01uF	5%	16V
C330	1-163-083-00	CERAMIC CHIP	1PF		50V
C331	1-164-232-11	CERAMIC CHIP	0.01uF		50V
C332	1-164-004-11	CERAMIC CHIP	0.1uF	10%	25V
C334	1-163-089-00	CERAMIC CHIP	6PF		50V
C335	1-164-004-11	CERAMIC CHIP	0.1uF	10%	25V
C338	1-163-131-00	CERAMIC CHIP	390PF	5%	50V
C339	1-164-346-11	CERAMIC CHIP	1uF		16V
C340	1-164-346-11	CERAMIC CHIP	1uF		16V
C404	1-164-182-11	CERAMIC CHIP	0.0033uF	10%	50V
C405	1-164-182-11	CERAMIC CHIP	0.0033uF	10%	50V
C406	1-164-182-11	CERAMIC CHIP	0.0033uF	10%	50V
C408	1-164-004-11	CERAMIC CHIP	0.1uF	10%	25V
C409	1-126-209-11	ELECT CHIP	100uF	20%	4V
C410	1-163-137-00	CERAMIC CHIP	680PF	5%	50V
C411	1-164-004-11	CERAMIC CHIP	0.1uF	10%	25V
C412	1-164-346-11	CERAMIC CHIP	1uF		16V
C413	1-163-023-00	CERAMIC CHIP	0.015uF	5%	50V
C414	1-163-023-00	CERAMIC CHIP	0.015uF	5%	50V
C415	1-163-809-11	CERAMIC CHIP	0.047uF	10%	25V

SIGNAL

Ref. No.	Part No.	Description			Remark
C416	1-163-809-11	CERAMIC CHIP	0.047uF	10%	25V
C417	1-163-024-00	CERAMIC CHIP	0.018uF	10%	50V
C418	1-163-012-00	CERAMIC CHIP	0.0018uF	10%	50V
C419	1-164-004-11	CERAMIC CHIP	0.1uF	10%	25V
C420	1-164-004-11	CERAMIC CHIP	0.1uF	10%	25V
C421	1-164-346-11	CERAMIC CHIP	1uF		16V
C424	1-163-024-00	CERAMIC CHIP	0.018uF	10%	50V
C425	1-163-012-00	CERAMIC CHIP	0.0018uF	10%	50V
C426	1-164-004-11	CERAMIC CHIP	0.1uF	10%	25V
C427	1-164-004-11	CERAMIC CHIP	0.1uF	10%	25V
C428	1-164-346-11	CERAMIC CHIP	1uF		16V
C429	1-164-346-11	CERAMIC CHIP	1uF		16V
C430	1-163-117-00	CERAMIC CHIP	100PF	5%	50V
C440	1-163-117-00	CERAMIC CHIP	100PF	5%	50V
C441	1-126-246-11	ELECT CHIP	220uF	20%	4V
C442	1-128-361-11	ELECT	470uF	20%	10V
C443	1-163-108-00	CERAMIC CHIP	43PF	5%	50V
C444	1-164-004-11	CERAMIC CHIP	0.1uF	10%	25V
C445	1-128-361-11	ELECT	470uF	20%	10V
C446	1-128-359-11	ELECT	100uF	20%	10V
C447	1-128-360-11	ELECT	220uF	20%	10V
C448	1-126-246-11	ELECT CHIP	220uF	20%	4V
C449	1-163-108-00	CERAMIC CHIP	43PF	5%	50V
C450	1-164-004-11	CERAMIC CHIP	0.1uF	10%	25V
C451	1-128-359-11	ELECT	100uF	20%	10V
C452	1-128-361-11	ELECT	470uF	20%	10V
C453	1-164-232-11	CERAMIC CHIP	0.01uF		50V
C454	1-164-232-11	CERAMIC CHIP	0.01uF		50V
C455	1-126-204-11	ELECT CHIP	47uF	20%	16V
C456	1-164-346-11	CERAMIC CHIP	1uF		16V
C457	1-164-346-11	CERAMIC CHIP	1uF		16V
C458	1-164-346-11	CERAMIC CHIP	1uF		16V
C460	1-164-346-11	CERAMIC CHIP	1uF		16V
C461	1-164-346-11	CERAMIC CHIP	1uF		16V
C462	1-164-346-11	CERAMIC CHIP	1uF		16V
C463	1-164-346-11	CERAMIC CHIP	1uF		16V
C464	1-164-232-11	CERAMIC CHIP	0.01uF		50V
C465	1-126-246-11	ELECT CHIP	220uF	20%	4V
C466	1-164-346-11	CERAMIC CHIP	1uF		16V
C467	1-164-346-11	CERAMIC CHIP	1uF		16V
C468	1-163-117-00	CERAMIC CHIP	100PF	5%	50V
C501	1-164-004-11	CERAMIC CHIP	0.1uF	10%	25V
C502	1-163-117-00	CERAMIC CHIP	100PF	5%	50V
C503	1-163-125-00	CERAMIC CHIP	220PF	5%	50V
C504	1-163-117-00	CERAMIC CHIP	100PF	5%	50V
C505	1-163-097-00	CERAMIC CHIP	15PF	5%	50V
C506	1-163-105-00	CERAMIC CHIP	33PF	5%	50V
C507	1-124-778-00	ELECT CHIP	22uF	20%	6.3V
C508	1-164-232-11	CERAMIC CHIP	0.01uF		50V
C509	1-163-093-00	CERAMIC CHIP	10PF	5%	50V
C511	1-130-834-00	FILM	1uF	10%	63V
C512	1-164-232-11	CERAMIC CHIP	0.01uF		50V
C513	1-164-232-11	CERAMIC CHIP	0.01uF		50V
C514	1-163-083-00	CERAMIC CHIP	1PF		50V
C515	1-162-839-11	CERAMIC	0.01uF	10%	16V (EXCEPT 1UK)
C515	1-163-839-91	CERAMIC CHIP	1.5PF	0.25PF	50V (1UK)
C516	1-164-232-11	CERAMIC CHIP	0.01uF		50V
C517	1-164-232-11	CERAMIC CHIP	0.01uF		50V
C518	1-164-232-11	CERAMIC CHIP	0.01uF		50V
C519	1-164-232-11	CERAMIC CHIP	0.01uF		50V
C520	1-163-083-00	CERAMIC CHIP	1PF		50V
C521	1-163-093-00	CERAMIC CHIP	10PF	5%	50V
C522	1-163-102-00	CERAMIC CHIP	24PF	5%	50V
C523	1-163-102-00	CERAMIC CHIP	24PF	5%	50V
C524	1-163-089-00	CERAMIC CHIP	6PF		50V
C525	1-163-102-00	CERAMIC CHIP	24PF	5%	50V
C526	1-164-232-11	CERAMIC CHIP	0.01uF		50V
C527	1-164-232-11	CERAMIC CHIP	0.01uF		50V
C528	1-164-232-11	CERAMIC CHIP	0.01uF		50V
C529	1-164-232-11	CERAMIC CHIP	0.01uF		50V
C530	1-126-246-11	ELECT CHIP	220uF	20%	4V
C531	1-164-232-11	CERAMIC CHIP	0.01uF		50V
C532	1-125-701-11	CAP, DOUBLE LAYER			
C533	1-164-004-11	CERAMIC CHIP	0.1uF	10%	25V
C534	1-163-117-00	CERAMIC CHIP	100PF	5%	50V
C535	1-163-125-00	CERAMIC CHIP	220PF	5%	50V
C536	1-163-117-00	CERAMIC CHIP	100PF	5%	50V
C537	1-130-833-00	FILM	0.82uF	10%	63V
C538	1-162-839-11	CERAMIC	0.01uF	10%	16V (EXCEPT 1UK)
C538	1-163-839-91	CERAMIC CHIP	1.5PF	0.25PF	50V (1UK)
C539	1-164-232-11	CERAMIC CHIP	0.01uF		50V
C540	1-163-085-00	CERAMIC CHIP	2PF		50V
C541	1-164-232-11	CERAMIC CHIP	0.01uF		50V
C542	1-126-209-11	ELECT CHIP	100uF	20%	4V
C543	1-163-141-00	CERAMIC CHIP	0.001uF	5%	50V
C544	1-163-109-00	CERAMIC CHIP	47PF	5%	50V
C545	1-163-109-00	CERAMIC CHIP	47PF	5%	50V
C546	1-164-232-11	CERAMIC CHIP	0.01uF		50V
C547	1-163-141-00	CERAMIC CHIP	0.001uF	5%	50V
C548	1-163-085-00	CERAMIC CHIP	2PF		50V
C549	1-164-232-11	CERAMIC CHIP	0.01uF		50V
C550	1-164-232-11	CERAMIC CHIP	0.01uF		50V
C551	1-124-778-00	ELECT CHIP	22uF	20%	6.3V
C552	1-163-083-00	CERAMIC CHIP	1PF		50V
C553	1-163-091-00	CERAMIC CHIP	8PF		50V

SIGNAL

Ref. No.	Part No.	Description			Remark
C554	1-163-091-00	CERAMIC CHIP	8PF		50V
C556	1-163-117-00	CERAMIC CHIP	100PF	5%	50V
C557	1-163-117-00	CERAMIC CHIP	100PF	5%	50V
C558	1-164-232-11	CERAMIC CHIP	0.01uF		50V
C701	1-164-004-11	CERAMIC CHIP	0.1uF	10%	25V
C702	1-163-093-00	CERAMIC CHIP	10PF	5%	50V
C704	1-124-778-00	ELECT CHIP	22uF	20%	6.3V
C705	1-162-638-11	CERAMIC CHIP	1uF		16V
C706	1-162-638-11	CERAMIC CHIP	1uF		16V
		< FILTER >			
CF301	1-577-030-11	FILTER, CERAMIC			
CF302	1-567-945-11	FILTER, CERAMIC			
CF303	1-577-599-11	FILTER, CERAMIC			
CF304	1-577-599-11	FILTER, CERAMIC			
CF305	1-577-599-11	FILTER, CERAMIC			
		< CONNECTOR >			
CN1	* 1-564-708-11	PIN, CONNECTOR (SMALL TYPE) 6P			
CN103	* 1-568-714-11	PIN, CONNECTOR 7P			
CN104	1-580-276-11	PIN, CONNECTOR 8P			
CN301	* 1-564-713-51	PIN, CONNECTOR (SMALL TYPE) 11P			
CN401	1-573-206-21	CONNECTOR, FPC (PC BOARD) 15P			
		< TRIMMER >			
CT1	1-141-322-11	CAP, VAR, TRIMMER (CHIP TYPE)			
CT2	1-141-322-11	CAP, VAR, TRIMMER (CHIP TYPE)			
CT3	1-141-322-11	CAP, VAR, TRIMMER (CHIP TYPE)			
CT4	1-141-322-11	CAP, VAR, TRIMMER (CHIP TYPE)			
CT5	1-141-322-11	CAP, VAR, TRIMMER (CHIP TYPE)			
CT201	1-141-327-11	CAP, VAR, TRIMMER (CHIP TYPE)			
CT202	1-141-327-11	CAP, VAR, TRIMMER (CHIP TYPE)			
CT251	1-141-327-11	CAP, VAR, TRIMMER (CHIP TYPE)			
CT252	1-141-327-11	CAP, VAR, TRIMMER (CHIP TYPE)			
CT253	1-141-327-11	CAP, VAR, TRIMMER (CHIP TYPE)			
CT501	1-141-322-11	CAP, VAR, TRIMMER (CHIP TYPE)			
CT502	1-141-327-11	CAP, VAR, TRIMMER (CHIP TYPE)			
CT503	1-141-327-11	CAP, VAR, TRIMMER (CHIP TYPE)			
		< DIODE >			
D1	8-719-123-79	DIODE	1SS279		
D2	8-719-123-79	DIODE	1SS279		
D3	8-719-123-79	DIODE	1SS279		
D4	8-719-123-79	DIODE	1SS279		
D5	8-719-123-79	DIODE	1SS279		
D6	8-719-123-79	DIODE	1SS279		
D7	8-719-123-79	DIODE	1SS279		
D8	8-719-123-79	DIODE	1SS279		
D9	8-719-123-79	DIODE	1SS279		
D10	8-719-123-79	DIODE	1SS279		
D11	8-719-123-79	DIODE	1SS279		
D12	8-719-104-34	DIODE	1S2836		
D13	8-719-123-79	DIODE	1SS279		
D14	8-719-123-79	DIODE	1SS279		
D15	8-719-123-79	DIODE	1SS279		
D16	8-719-123-79	DIODE	1SS279		
D17	8-719-400-18	DIODE	MA152WK		
D18	8-719-123-79	DIODE	1SS279		
D19	8-719-123-79	DIODE	1SS279		
D20	8-719-123-79	DIODE	1SS279		
D21	8-719-400-18	DIODE	MA152WK		
D22	8-719-400-18	DIODE	MA152WK		
D201	8-719-104-34	DIODE	1S2836		
D202	8-719-104-34	DIODE	1S2836		
D204	8-719-400-18	DIODE	MA152WK		
D205	8-719-400-18	DIODE	MA152WK		
D206	8-719-104-34	DIODE	1S2836		
D253	8-713-300-57	DIODE	1T33		
D254	8-713-300-57	DIODE	1T33		
D255	8-713-300-57	DIODE	1T33		
D256	8-713-300-57	DIODE	1T33		
D301	8-719-400-18	DIODE	MA152WK		
D302	8-719-400-18	DIODE	MA152WK		
D303	8-719-400-18	DIODE	MA152WK		
D304	8-719-400-18	DIODE	MA152WK		
D305	8-719-400-18	DIODE	MA152WK		
D306	8-719-400-18	DIODE	MA152WK		
D401	8-719-157-36	DIODE	RD6.8M-B		
D402	8-719-400-18	DIODE	MA152WK		
D403	8-719-400-18	DIODE	MA152WK		
D410	8-719-938-72	DIODE	SB01-05CP		
D501	8-719-800-76	DIODE	1SS226		
D502	8-713-300-57	DIODE	1T33		
D503	8-713-300-57	DIODE	1T33		
D504	8-719-157-36	DIODE	RD6.8M-B		
D505	8-719-157-36	DIODE	RD6.8M-B		
D506	8-719-938-72	DIODE	SB01-05CP		
D701	8-719-106-62	DIODE	RD11M-B2		
D702	8-719-400-18	DIODE	MA152WK		
		< IC >			
IC1	8-759-925-74	IC	SN74HC04ANS		
IC2	8-759-926-11	IC	SN74HC138ANS		
IC3	8-759-009-22	IC	MC14094BF		
IC301	8-752-055-83	IC	CXA1376S		
IC401	8-759-998-98	IC	LM358DR		
IC402	8-759-011-65	IC	MC74HC4053F		
IC403	8-759-804-98	IC	LA3335M		
IC405	8-759-144-31	IC	uPC1316C		

Ref. No.	Part No.	Description	Remark
IC406	8-759-009-22	IC MC14094BF	
IC407	8-759-926-64	IC SN74HC367ANS	
IC408	8-759-801-15	IC LA5003M	
IC409	8-759-998-98	IC LM358DR	
IC501	8-752-323-84	IC CXD1118M	
IC502	8-752-323-84	IC CXD1118M	
IC503	8-759-144-23	IC uPC1037GR	
IC504	8-759-144-23	IC uPC1037GR	
IC505	8-759-925-72	IC SN74HC02ANS	
IC506	8-759-801-15	IC LA5003M	
		< COIL >	
L1	1-410-987-11	INDUCTOR CHIP 0.33uH	
L2	1-410-985-11	INDUCTOR CHIP 0.22uH	
L3	1-410-985-11	INDUCTOR CHIP 0.22uH	
L4	1-410-991-11	INDUCTOR CHIP 0.68uH	
L6	1-410-989-11	INDUCTOR CHIP 0.47uH	
L7	1-410-989-11	INDUCTOR CHIP 0.47uH	
L8	1-410-992-11	INDUCTOR CHIP 0.82uH	
L10	1-410-991-11	INDUCTOR CHIP 0.68uH	
L11	1-410-992-11	INDUCTOR CHIP 0.82uH	
L12	1-410-994-11	INDUCTOR CHIP 1.2uH	
L14	1-410-993-11	INDUCTOR CHIP 1uH	
L15	1-410-994-11	INDUCTOR CHIP 1.2uH	
L16	1-410-997-31	INDUCTOR CHIP 2.2uH	
L18	1-410-997-31	INDUCTOR CHIP 2.2uH	
L19	1-410-997-31	INDUCTOR CHIP 2.2uH	
L20	1-410-993-11	INDUCTOR CHIP 1uH	
L22	1-410-393-11	INDUCTOR CHIP 100uH	
L23	1-410-993-11	INDUCTOR CHIP 1uH	
L24	1-410-993-11	INDUCTOR CHIP 1uH	
L25	1-410-992-11	INDUCTOR CHIP 0.82uH	
L26	1-412-006-31	INDUCTOR CHIP 10uH	
L201	1-410-658-31	INDUCTOR CHIP 220uH	
L202	1-410-793-51	INDUCTOR CHIP 2.2mH	
L251	1-410-993-11	INDUCTOR CHIP 1uH	
L252	1-406-422-11	COIL (OSC)	
L253	1-410-997-31	INDUCTOR CHIP 2.2uH	
L254	1-410-986-31	INDUCTOR CHIP 0.27uH	
L255	1-410-985-11	INDUCTOR CHIP 0.22uH	
L301	1-406-423-11	COIL (OSC)	
L302	1-426-561-11	COIL (RF)	
L303	1-426-561-11	COIL (RF)	
L304	1-410-988-11	I1N1DUCTOR CHIP 0.39uH	
L305	1-412-006-31	INDUCTOR CHIP 10uH	
L306	1-410-986-31	INDUCTOR CHIP 0.27uH	
L307	1-410-985-11	INDUCTOR CHIP 0.22uH	
L308	1-410-989-11	INDUCTOR CHIP 0.47uH	
L501	1-406-420-11	COIL (OSC)	
L502	1-406-421-11	COIL (OSC)	
L503	1-412-011-31	INDUCTOR CHIP 27uH	
L504	1-412-011-31	INDUCTOR CHIP 27uH	
L505	1-410-996-31	INDUCTOR CHIP 1.8uH	
L506	1-410-992-11	INDUCTOR CHIP 0.82uH	
L507	1-410-989-11	INDUCTOR CHIP 0.47uH	
L508	1-412-011-31	INDUCTOR CHIP 27uH	
L509	1-412-004-31	INDUCTOR CHIP 6.8uH	
L510	1-410-993-11	INDUCTOR CHIP 1uH	
L511	1-410-989-11	INDUCTOR CHIP 0.47uH	
L512	1-410-987-11	INDUCTOR CHIP 0.33uH	
L514	1-412-006-31	INDUCTOR CHIP 10uH	
L701	1-410-658-31	INDUCTOR CHIP 220uH	
L702	1-412-011-31	INDUCTOR CHIP 27uH	
		< TRANSISTOR >	
Q1	8-729-901-00	TRANSISTOR DTC124EK	
Q2	8-729-901-00	TRANSISTOR DTC124EK	
Q3	8-729-901-00	TRANSISTOR DTC124EK	
Q4	8-729-901-00	TRANSISTOR DTC124EK	
Q5	8-729-116-64	TRANSISTOR 2SK508-K51	
Q6	8-729-216-22	TRANSISTOR 2SA1162-G	
Q7	8-729-901-00	TRANSISTOR DTC124EK	
Q8	8-729-120-28	TRANSISTOR 2SC1623-L5L6	
Q9	8-729-116-64	TRANSISTOR 2SK508-K51	
Q10	8-729-116-64	TRANSISTOR 2SK508-K51	
Q11	8-729-904-87	TRANSISTOR 2SB1197K-R	
Q12	8-729-116-64	TRANSISTOR 2SK508-K51	
Q13	8-729-216-22	TRANSISTOR 2SA1162-G	
Q14	8-729-216-22	TRANSISTOR 2SA1162-G	
Q15	8-729-901-00	TRANSISTOR DTC124EK	
Q201	8-729-120-28	TRANSISTOR 2SC1623-L5L6	
Q202	8-729-116-64	TRANSISTOR 2SK508-K51	
Q203	8-729-120-28	TRANSISTOR 2SC1623-L5L6	
Q204	8-729-120-28	TRANSISTOR 2SC1623-L5L6	
Q205	8-729-116-64	TRANSISTOR 2SK508-K51	
Q206	8-729-120-28	TRANSISTOR 2SC1623-L5L6	
Q208	8-729-900-51	TRANSISTOR DTA114TK	
Q209	8-729-900-51	TRANSISTOR DTA114TK	
Q210	8-729-900-51	TRANSISTOR DTA114TK	
Q251	8-729-123-86	TRANSISTOR 2SK238-K16	
Q252	8-729-920-38	TRANSISTOR 2SC2059K-N	
Q253	8-729-920-38	TRANSISTOR 2SC2059K-N	
Q254	8-729-208-47	TRANSISTOR 2SK210GR	
Q255	8-729-900-51	TRANSISTOR DTA114TK	
Q301	8-729-901-05	TRANSISTOR DTA124EK	

SIGNAL

Ref. No.	Part No.	Description		Remark
Q302	8-729-901-00	TRANSISTOR	DTC124EK	
Q303	8-729-901-00	TRANSISTOR	DTC124EK	
Q304	8-729-216-22	TRANSISTOR	2SA1162-G	
Q305	8-729-901-00	TRANSISTOR	DTC124EK	
Q307	8-729-901-05	TRANSISTOR	DTA124EK	
Q308	8-729-901-00	TRANSISTOR	DTC124EK	
Q309	8-729-114-63	TRANSISTOR	3SK132A-U36	
Q310	8-729-901-00	TRANSISTOR	DTC124EK	
Q311	8-729-120-28	TRANSISTOR	2SC1623-L5L6	
Q312	8-729-120-28	TRANSISTOR	2SC1623-L5L6	
Q313	8-729-920-38	TRANSISTOR	2SC2059K-N	
Q314	8-729-901-00	TRANSISTOR	DTC124EK	
Q315	8-729-901-00	TRANSISTOR	DTC124EK	
Q316	8-729-216-22	TRANSISTOR	2SA1162-G	
Q317	8-729-120-28	TRANSISTOR	2SC1623-L5L6	
Q318	8-729-901-00	TRANSISTOR	DTC124EK	
Q319	8-729-120-28	TRANSISTOR	2SC1623-L5L6	
Q320	8-729-901-00	TRANSISTOR	DTC124EK	
Q321	8-729-120-28	TRANSISTOR	2SC1623-L5L6	
Q322	8-729-901-00	TRANSISTOR	DTC124EK	
Q401	8-729-921-72	TRANSISTOR	2SD1781K-R	
Q402	8-729-901-05	TRANSISTOR	DTA124EK	
Q403	8-729-901-05	TRANSISTOR	DTA124EK	
Q404	8-729-120-28	TRANSISTOR	2SC1623-L5L6	
Q405	8-729-921-72	TRANSISTOR	2SD1781K-R	
Q406	8-729-120-28	TRANSISTOR	2SC1623-L5L6	
Q407	8-729-921-72	TRANSISTOR	2SD1781K-R	
Q408	8-729-106-60	TRANSISTOR	2SB1115A-YQ	
Q409	8-729-904-87	TRANSISTOR	2SB1197K-R	
Q410	8-729-901-00	TRANSISTOR	DTC124EK	
Q411	8-729-921-72	TRANSISTOR	2SD1781K-R	
Q501	8-729-220-93	TRANSISTOR	2SK209-G	
Q502	8-729-220-93	TRANSISTOR	2SK209-G	
Q503	8-729-120-28	TRANSISTOR	2SC1623-L5L6	
Q504	8-729-920-38	TRANSISTOR	2SC2059K-N	
Q505	8-729-208-47	TRANSISTOR	2SK210GR	
Q506	8-729-904-87	TRANSISTOR	2SB1197K-R	
Q507	8-729-120-28	TRANSISTOR	2SC1623-L5L6	
Q508	8-729-220-93	TRANSISTOR	2SK209-G	
Q509	8-729-120-28	TRANSISTOR	2SC1623-L5L6	
Q510	8-729-208-47	TRANSISTOR	2SK210GR	
Q701	8-729-120-28	TRANSISTOR	2SC1623-L5L6	
Q702	8-729-120-28	TRANSISTOR	2SC1623-L5L6	

< RESISTOR >

Ref. No.	Part No.	Description				Remark
R1	1-216-081-00	METAL CHIP	22K	5%	1/10W	
R2	1-216-081-00	METAL CHIP	22K	5%	1/10W	
R3	1-216-081-00	METAL CHIP	22K	5%	1/10W	
R4	1-216-049-00	METAL CHIP	1K	5%	1/10W	
R5	1-216-081-00	METAL CHIP	22K	5%	1/10W	
R6	1-216-039-00	METAL CHIP	390	5%	1/10W	
R7	1-216-039-00	METAL CHIP	390	5%	1/10W	
R8	1-216-039-00	METAL CHIP	390	5%	1/10W	
R9	1-216-039-00	METAL CHIP	390	5%	1/10W	
R10	1-216-039-00	METAL CHIP	390	5%	1/10W	
R11	1-216-039-00	METAL CHIP	390	5%	1/10W	
R12	1-216-049-00	METAL CHIP	1K	5%	1/10W	
R13	1-216-049-00	METAL CHIP	1K	5%	1/10W	
R14	1-216-049-00	METAL CHIP	1K	5%	1/10W	
R15	1-216-049-00	METAL CHIP	1K	5%	1/10W	
R16	1-216-049-00	METAL CHIP	1K	5%	1/10W	
R17	1-216-049-00	METAL CHIP	1K	5%	1/10W	
R18	1-216-049-00	METAL CHIP	1K	5%	1/10W	
R19	1-216-049-00	METAL CHIP	1K	5%	1/10W	
R20	1-216-049-00	METAL CHIP	1K	5%	1/10W	
R21	1-216-049-00	METAL CHIP	1K	5%	1/10W	
R22	1-216-049-00	METAL CHIP	1K	5%	1/10W	
R23	1-216-049-00	METAL CHIP	1K	5%	1/10W	
R24	1-216-065-00	METAL CHIP	4.7K	5%	1/10W	
R25	1-216-017-00	METAL CHIP	47	5%	1/10W	
R26	1-216-037-00	METAL CHIP	330	5%	1/10W	
R27	1-216-017-00	METAL CHIP	47	5%	1/10W	
R28	1-216-097-00	METAL CHIP	100K	5%	1/10W	
R29	1-216-057-00	METAL CHIP	2.2K	5%	1/10W	
R30	1-216-025-00	METAL CHIP	100	5%	1/10W	
R31	1-216-057-00	METAL CHIP	2.2K	5%	1/10W	
R32	1-216-057-00	METAL CHIP	2.2K	5%	1/10W	
R33	1-216-097-00	METAL CHIP	100K	5%	1/10W	
R34	1-216-097-00	METAL CHIP	100K	5%	1/10W	
R35	1-216-065-00	METAL CHIP	4.7K	5%	1/10W	
R36	1-216-017-00	METAL CHIP	47	5%	1/10W	
R37	1-216-057-00	METAL CHIP	2.2K	5%	1/10W	
R38	1-216-057-00	METAL CHIP	2.2K	5%	1/10W	
R39	1-216-025-00	METAL CHIP	100	5%	1/10W	
R40	1-216-025-00	METAL CHIP	100	5%	1/10W	
R41	1-216-065-00	METAL CHIP	4.7K	5%	1/10W	
R42	1-216-065-00	METAL CHIP	4.7K	5%	1/10W	
R43	1-216-097-00	METAL CHIP	100K	5%	1/10W	
R44	1-216-097-00	METAL CHIP	100K	5%	1/10W	
R45	1-216-017-00	METAL CHIP	47	5%	1/10W	
R47	1-216-017-00	METAL CHIP	47	5%	1/10W	
R48	1-216-057-00	METAL CHIP	2.2K	5%	1/10W	
R49	1-216-057-00	METAL CHIP	2.2K	5%	1/10W	
R50	1-216-057-00	METAL CHIP	2.2K	5%	1/10W	
R51	1-216-057-00	METAL CHIP	2.2K	5%	1/10W	
R52	1-216-113-00	METAL CHIP	470K	5%	1/10W	
R53	1-216-065-00	METAL CHIP	4.7K	5%	1/10W	
R54	1-216-065-00	METAL CHIP	4.7K	5%	1/10W	

SIGNAL

Ref. No.	Part No.	Description				Remark
R55	1-216-065-00	METAL CHIP	4.7K	5%	1/10W	
R56	1-216-113-00	METAL CHIP	470K	5%	1/10W	
R57	1-216-097-00	METAL CHIP	100K	5%	1/10W	
R58	1-216-073-00	METAL CHIP	10K	5%	1/10W	
R59	1-216-025-00	METAL CHIP	100	5%	1/10W	
R60	1-216-025-00	METAL CHIP	100	5%	1/10W	
R61	1-216-025-00	METAL CHIP	100	5%	1/10W	
R62	1-216-073-00	METAL CHIP	10K	5%	1/10W	
R201	1-216-049-00	METAL CHIP	1K	5%	1/10W	
R202	1-216-049-00	METAL CHIP	1K	5%	1/10W	
R203	1-216-081-00	METAL CHIP	22K	5%	1/10W	
R204	1-216-081-00	METAL CHIP	22K	5%	1/10W	
R205	1-216-049-00	METAL CHIP	1K	5%	1/10W	
R206	1-216-049-00	METAL CHIP	1K	5%	1/10W	
R207	1-216-009-00	METAL CHIP	22	5%	1/10W	
R208	1-216-057-00	METAL CHIP	2.2K	5%	1/10W	
R209	1-216-033-00	METAL CHIP	220	5%	1/10W	
R210	1-216-009-00	METAL CHIP	22	5%	1/10W	
R211	1-216-057-00	METAL CHIP	2.2K	5%	1/10W	
R212	1-216-033-00	METAL CHIP	220	5%	1/10W	
R213	1-216-089-00	METAL CHIP	47K	5%	1/10W	
R214	1-216-295-00	METAL CHIP	0	5%	1/10W	
R215	1-216-073-00	METAL CHIP	10K	5%	1/10W	
R216	1-216-073-00	METAL CHIP	10K	5%	1/10W	
R253	1-216-049-00	METAL CHIP	1K	5%	1/10W	
R255	1-216-097-00	METAL CHIP	100K	5%	1/10W	
R256	1-216-097-00	METAL CHIP	100K	5%	1/10W	
R257	1-216-097-00	METAL CHIP	100K	5%	1/10W	
R258	1-216-025-00	METAL CHIP	100	5%	1/10W	
R259	1-216-049-00	METAL CHIP	1K	5%	1/10W	
R260	1-216-111-00	METAL CHIP	390K	5%	1/10W	
R261	1-216-057-00	METAL CHIP	2.2K	5%	1/10W	
R262	1-216-295-00	METAL CHIP	0	5%	1/10W	
R263	1-216-059-00	METAL CHIP	2.7K	5%	1/10W	
R264	1-216-049-00	METAL CHIP	1K	5%	1/10W	
R265	1-216-033-00	METAL CHIP	220	5%	1/10W	
R266	1-216-097-00	METAL CHIP	100K	5%	1/10W	
R267	1-216-073-00	METAL CHIP	10K	5%	1/10W	
R268	1-216-013-00	METAL CHIP	33	5%	1/10W	
R269	1-216-017-00	METAL CHIP	47	5%	1/10W	
R270	1-216-073-00	METAL CHIP	10K	5%	1/10W	
R301	1-216-017-00	METAL CHIP	47	5%	1/10W	
R302	1-216-069-00	METAL CHIP	6.8K	5%	1/10W	
R303	1-216-069-00	METAL CHIP	6.8K	5%	1/10W	
R304	1-216-069-00	METAL CHIP	6.8K	5%	1/10W	
R305	1-216-069-00	METAL CHIP	6.8K	5%	1/10W	
R306	1-216-069-00	METAL CHIP	6.8K	5%	1/10W	
R307	1-216-069-00	METAL CHIP	6.8K	5%	1/10W	
R308	1-216-049-00	METAL CHIP	1K	5%	1/10W	
R309	1-216-049-00	METAL CHIP	1K	5%	1/10W	
R310	1-216-057-00	METAL CHIP	2.2K	5%	1/10W	
R311	1-216-085-00	METAL CHIP	33K	5%	1/10W	
R312	1-216-001-00	METAL CHIP	10	5%	1/10W	
R313	1-216-073-00	METAL CHIP	10K	5%	1/10W	
R314	1-216-025-00	METAL CHIP	100	5%	1/10W	
R315	1-216-057-00	METAL CHIP	2.2K	5%	1/10W	
R316	1-216-295-00	METAL CHIP	0	5%	1/10W	
R317	1-216-061-00	METAL CHIP	3.3K	5%	1/10W	
R318	1-216-085-00	METAL CHIP	33K	5%	1/10W	
R319	1-216-085-00	METAL CHIP	33K	5%	1/10W	
R320	1-216-053-00	METAL CHIP	1.5K	5%	1/10W	
R321	1-216-081-00	METAL CHIP	22K	5%	1/10W	
R324	1-216-017-00	METAL CHIP	47	5%	1/10W	
R325	1-216-033-00	METAL CHIP	220	5%	1/10W	
R327	1-216-057-00	METAL CHIP	2.2K	5%	1/10W	
R328	1-216-057-00	METAL CHIP	2.2K	5%	1/10W	
R329	1-216-073-00	METAL CHIP	10K	5%	1/10W	
R330	1-216-063-00	METAL CHIP	3.9K	5%	1/10W	
R331	1-216-063-00	METAL CHIP	3.9K	5%	1/10W	
R332	1-216-041-00	METAL CHIP	470	5%	1/10W	
R333	1-216-049-00	METAL CHIP	1K	5%	1/10W	
R334	1-216-057-00	METAL CHIP	2.2K	5%	1/10W	
R335	1-216-081-00	METAL CHIP	22K	5%	1/10W	
R336	1-216-093-00	METAL CHIP	68K	5%	1/10W	
R337	1-216-033-00	METAL CHIP	220	5%	1/10W	
R338	1-216-025-00	METAL CHIP	100	5%	1/10W	
R339	1-216-063-00	METAL CHIP	3.9K	5%	1/10W	
R340	1-216-081-00	METAL CHIP	22K	5%	1/10W	
R341	1-216-105-00	METAL CHIP	220K	5%	1/10W	
R342	1-216-089-00	METAL CHIP	47K	5%	1/10W	
R343	1-216-097-00	METAL CHIP	100K	5%	1/10W	
R344	1-216-081-00	METAL CHIP	22K	5%	1/10W	
R347	1-216-057-00	METAL CHIP	2.2K	5%	1/10W	
R348	1-216-097-00	METAL CHIP	100K	5%	1/10W	
R349	1-216-097-00	METAL CHIP	100K	5%	1/10W	
R350	1-216-097-00	METAL CHIP	100K	5%	1/10W	
R351	1-216-081-00	METAL CHIP	22K	5%	1/10W	
R352	1-216-097-00	METAL CHIP	100K	5%	1/10W	
R353	1-216-089-00	METAL CHIP	47K	5%	1/10W	
R401	1-216-073-00	METAL CHIP	10K	5%	1/10W	
R404	1-216-091-00	METAL CHIP	56K	5%	1/10W	
R405	1-216-121-00	METAL CHIP	1M	5%	1/10W	
R406	1-216-113-00	METAL CHIP	470K	5%	1/10W	
R407	1-216-099-00	METAL CHIP	120K	5%	1/10W	
R408	1-216-057-00	METAL CHIP	2.2K	5%	1/10W	
R409	1-216-748-11	METAL CHIP	39K	5%	1/10W	
R410	1-216-105-00	METAL CHIP	220K	5%	1/10W	
R411	1-216-049-00	METAL CHIP	1K	5%	1/10W	

SIGNAL

Ref. No.	Part No.	Description			Remark
R412	1-216-093-00	METAL CHIP	68K	5%	1/10W
R414	1-216-073-00	METAL CHIP	10K	5%	1/10W
R415	1-216-091-00	METAL CHIP	56K	5%	1/10W
R416	1-216-073-00	METAL CHIP	10K	5%	1/10W
R417	1-216-081-00	METAL CHIP	22K	5%	1/10W
R418	1-216-113-00	METAL CHIP	470K	5%	1/10W
R419	1-216-057-00	METAL CHIP	2.2K	5%	1/10W
R420	1-216-073-00	METAL CHIP	10K	5%	1/10W
R421	1-216-091-00	METAL CHIP	56K	5%	1/10W
R422	1-216-073-00	METAL CHIP	10K	5%	1/10W
R423	1-216-081-00	METAL CHIP	22K	5%	1/10W
R424	1-216-113-00	METAL CHIP	470K	5%	1/10W
R425	1-216-057-00	METAL CHIP	2.2K	5%	1/10W
R426	1-216-065-00	METAL CHIP	4.7K	5%	1/10W
R427	1-216-065-00	METAL CHIP	4.7K	5%	1/10W
R428	1-216-011-00	METAL CHIP	27	5%	1/10W
R429	1-216-298-00	METAL CHIP	2.2	5%	1/10W
R430	1-216-011-00	METAL CHIP	27	5%	1/10W
R431	1-216-298-00	METAL CHIP	2.2	5%	1/10W
R432	1-216-097-00	METAL CHIP	100K	5%	1/10W
R433	1-216-113-00	METAL CHIP	470K	5%	1/10W
R434	1-216-057-00	METAL CHIP	2.2K	5%	1/10W
R435	1-216-057-00	METAL CHIP	2.2K	5%	1/10W
R436	1-216-113-00	METAL CHIP	470K	5%	1/10W
R437	1-216-057-00	METAL CHIP	2.2K	5%	1/10W
R438	1-216-097-00	METAL CHIP	100K	5%	1/10W
R439	1-216-057-00	METAL CHIP	2.2K	5%	1/10W
R440	1-216-121-00	METAL CHIP	1M	5%	1/10W
R441	1-216-121-00	METAL CHIP	1M	5%	1/10W
R442	1-216-121-00	METAL CHIP	1M	5%	1/10W
R443	1-216-121-00	METAL CHIP	1M	5%	1/10W
R444	1-216-065-00	METAL CHIP	4.7K	5%	1/10W
R445	1-216-065-00	METAL CHIP	4.7K	5%	1/10W
R446	1-216-105-00	METAL CHIP	220K	5%	1/10W
R447	1-216-097-00	METAL CHIP	100K	5%	1/10W
R450	1-216-085-00	METAL CHIP	33K	5%	1/10W
R451	1-216-085-00	METAL CHIP	33K	5%	1/10W
R452	1-216-085-00	METAL CHIP	33K	5%	1/10W
R453	1-216-085-00	METAL CHIP	33K	5%	1/10W
R454	1-216-085-00	METAL CHIP	33K	5%	1/10W
R455	1-216-089-00	METAL CHIP	47K	5%	1/10W
R456	1-216-089-00	METAL CHIP	47K	5%	1/10W
R457	1-216-089-00	METAL CHIP	47K	5%	1/10W
R458	1-216-089-00	METAL CHIP	47K	5%	1/10W
R459	1-216-089-00	METAL CHIP	47K	5%	1/10W
R460	1-216-093-00	METAL CHIP	68K	5%	1/10W
R461	1-216-105-00	METAL CHIP	220K	5%	1/10W
R462	1-216-049-00	METAL CHIP	1K	5%	1/10W
R463	1-216-295-00	METAL CHIP	0	5%	1/10W
R464	1-216-073-00	METAL CHIP	10K	5%	1/10W
R501	1-216-073-00	METAL CHIP	10K	5%	1/10W
R502	1-216-073-00	METAL CHIP	10K	5%	1/10W
R503	1-216-073-00	METAL CHIP	10K	5%	1/10W
R504	1-216-061-00	METAL CHIP	3.3K	5%	1/10W
R505	1-216-057-00	METAL CHIP	2.2K	5%	1/10W
R506	1-216-057-00	METAL CHIP	2.2K	5%	1/10W
R507	1-216-057-00	METAL CHIP	2.2K	5%	1/10W
R508	1-216-049-00	METAL CHIP	1K	5%	1/10W
R509	1-216-061-00	METAL CHIP	3.3K	5%	1/10W
R511	1-216-033-00	METAL CHIP	220	5%	1/10W
R512	1-216-033-00	METAL CHIP	220	5%	1/10W
R513	1-216-089-00	METAL CHIP	47K	5%	1/10W
R514	1-216-073-00	METAL CHIP	10K	5%	1/10W
R515	1-216-013-00	METAL CHIP	33	5%	1/10W
R516	1-216-017-00	METAL CHIP	47	5%	1/10W
R517	1-216-057-00	METAL CHIP	2.2K	5%	1/10W
R518	1-216-033-00	METAL CHIP	220	5%	1/10W
R519	1-216-091-00	METAL CHIP	56K	5%	1/10W
R520	1-216-057-00	METAL CHIP	2.2K	5%	1/10W
R521	1-216-061-00	METAL CHIP	3.3K	5%	1/10W
R522	1-216-065-00	METAL CHIP	4.7K	5%	1/10W
R523	1-216-057-00	METAL CHIP	2.2K	5%	1/10W
R524	1-216-057-00	METAL CHIP	2.2K	5%	1/10W
R525	1-216-057-00	METAL CHIP	2.2K	5%	1/10W
R526	1-216-049-00	METAL CHIP	1K	5%	1/10W
R527	1-216-121-00	METAL CHIP	1M	5%	1/10W
R528	1-216-039-00	METAL CHIP	390	5%	1/10W
R529	1-216-017-00	METAL CHIP	47	5%	1/10W
R530	1-216-013-00	METAL CHIP	33	5%	1/10W
R531	1-216-073-00	METAL CHIP	10K	5%	1/10W
R532	1-216-073-00	METAL CHIP	10K	5%	1/10W
R533	1-216-073-00	METAL CHIP	10K	5%	1/10W
R534	1-216-057-00	METAL CHIP	2.2K	5%	1/10W
R704	1-216-097-00	METAL CHIP	100K	5%	1/10W
R705	1-216-097-00	METAL CHIP	100K	5%	1/10W
R706	1-216-093-00	METAL CHIP	68K	5%	1/10W
R707	1-216-057-00	METAL CHIP	2.2K	5%	1/10W

< VARIABLE RESISTOR >

RV301	1-238-994-11	RES, ADJ, METAL GLAZE 100K
RV401	1-238-992-11	RES, ADJ, METAL GLAZE 22K
RV402	1-241-534-11	RES, VAR, CARBON 100K/100K
RV403	1-241-534-11	RES, VAR, CARBON 100K/100K
RV404	1-241-533-11	RES, VAR, SLIDE 20K/20K

SIGNAL TUNE

Ref. No.	Part No.	Description	Remark
		< TRANSFORMER >	
T1	1-402-559-11	COIL (ANT)	
T2	1-402-560-11	COIL (ANT)	
T3	1-402-561-11	COIL (ANT)	
T4	1-402-562-11	COIL (ANT)	
T5	1-402-563-11	COIL (ANT)	
T8	1-426-357-11	TRANSFORMER, RF	
T9	1-426-560-11	TRANSFORMER, HIGH-FREQUENCY	
T251	1-402-558-11	COIL (ANT)	
T252	1-426-559-11	COIL (RF)	
T253	1-404-966-11	TRANSFORMER, MIDWAY-FREQUENCY	
T301	1-404-965-11	TRANSFORMER, MIDWAY-FREQUENCY	
T701	1-450-531-21	TRANSFORMER, DC-DC CONVERTER	
		< VIBRATOR, CERAMIC >	
X301	1-579-339-11	VIBRATOR, LITHIUM TANTALATE 3750KHz	
X302	1-567-385-11	OSCILLATOR, CRYSTAL 55.39MHz	
X501	1-567-386-11	OSCILLATOR, CRYSTAL 6.275MHz	
		< FILTER >	
XF301	1-527-372-00	FILTER, CRYSTAL	
XF302	1-527-372-00	FILTER, CRYSTAL	

****

TUNE BOARD
****

Ref. No.	Part No.	Description			
		< CAPACITOR >			
C101	1-164-004-11	CERAMIC CHIP	0.1uF	10%	25V
C102	1-164-004-11	CERAMIC CHIP	0.1uF	10%	25V
C103	1-163-117-00	CERAMIC CHIP	100PF	5%	50V
C104	1-164-004-11	CERAMIC CHIP	0.1uF	10%	25V
		< CONNECTOR >			
CN101	1-563-309-11	CONNECTOR, BOARD TO BOARD 7P			
CN102 *	1-563-310-11	CONNECTOR, BOARD TO BOARD 8P			
		< DIODE >			
D101	8-719-951-05	DIODE KV1560			
D102	8-719-951-05	DIODE KV1560			
		< IC >			
IC101	8-759-720-23	IC AK93C57F			
IC102	8-759-925-74	IC SN74HC04ANS			
IC103	8-759-032-59	IC MC74HC595AF			
IC104	8-759-939-41	IC S-81230AG-RB			
IC105	8-759-929-21	IC TLC27L2CPS			

Ref. No.	Part No.	Description			
		< RESISTOR >			
R101	1-216-699-11	METAL CHIP	100K	0.5%	1/10W
R102	1-216-682-11	METAL CHIP	20K	0.5%	1/10W
R103	1-216-675-11	METAL CHIP	10K	0.5%	1/10W
R104	1-216-682-11	METAL CHIP	20K	0.5%	1/10W
R105	1-216-675-11	METAL CHIP	10K	0.5%	1/10W
R106	1-216-682-11	METAL CHIP	20K	0.5%	1/10W
R107	1-216-682-11	METAL CHIP	20K	0.5%	1/10W
R108	1-216-682-11	METAL CHIP	20K	0.5%	1/10W
R109	1-216-682-11	METAL CHIP	20K	0.5%	1/10W
R110	1-216-682-11	METAL CHIP	20K	0.5%	1/10W
R111	1-216-682-11	METAL CHIP	20K	0.5%	1/10W
R112	1-216-682-11	METAL CHIP	20K	0.5%	1/10W
R113	1-216-682-11	METAL CHIP	20K	0.5%	1/10W
R114	1-216-682-11	METAL CHIP	20K	0.5%	1/10W
R115	1-216-682-11	METAL CHIP	20K	0.5%	1/10W
R116	1-216-682-11	METAL CHIP	20K	0.5%	1/10W
R117	1-216-675-11	METAL CHIP	10K	0.5%	1/10W
R118	1-216-675-11	METAL CHIP	10K	0.5%	1/10W
R119	1-216-675-11	METAL CHIP	10K	0.5%	1/10W
R120	1-216-675-11	METAL CHIP	10K	0.5%	1/10W
R121	1-216-675-11	METAL CHIP	10K	0.5%	1/10W
R122	1-216-675-11	METAL CHIP	10K	0.5%	1/10W
R123	1-216-675-11	METAL CHIP	10K	0.5%	1/10W
R124	1-216-699-11	METAL CHIP	100K	0.5%	1/10W
R125	1-216-697-11	METAL CHIP	82K	0.5%	1/10W
R126	1-216-675-11	METAL CHIP	10K	0.5%	1/10W
R127	1-216-699-11	METAL CHIP	100K	0.5%	1/10W
R128	1-216-697-11	METAL CHIP	82K	0.5%	1/10W
R129	1-216-689-11	METAL CHIP	39K	0.5%	1/10W
R130	1-216-699-11	METAL CHIP	100K	0.5%	1/10W
R132	1-216-699-11	METAL CHIP	100K	0.5%	1/10W
R133	1-216-699-11	METAL CHIP	100K	0.5%	1/10W
R134	1-216-699-11	METAL CHIP	100K	0.5%	1/10W
R135	1-216-699-11	METAL CHIP	100K	0.5%	1/10W
R136	1-216-049-00	METAL CHIP	1K	5%	1/10W
		< THERMISTOR >			
TH101	1-808-656-11	THERMISTOR			

****

MISCELLANEOUS
****

70 *	1-535-903-11	CONDUCTIVE BOARD, CONNECTION
ANT1	1-501-505-11	ANTENNA, ETLESCOPIC
SP101	1-544-498-11	SPEAKER
SW800	1-466-537-11	ENCODER, ROTARY

Ref. No.	Part No.	Description	Remark
		ACCESSORIES & PACKING MATERIALS	
		**********	
	A-3604-167-A	COMPACT ANTENNA AN-71	
⚠	1-465-775-11	ADAPTOR, AC (1AE1, 1AE2, 2AE2, 1E2, 1E4, 2AE4, 1FR, 4IT, 3EA)	
⚠	1-465-846-11	ADAPTOR, AC (CA)	
⚠	1-465-847-11	ADAPTOR, AC (1UK)	
⚠	1-465-953-11	ADAPTOR, AC (US)	
	1-557-787-11	CONNECTOR, CONNECTION	
⚠	1-569-008-11	ADAPTER, CONVERSION 2P (1AE1, 1AE2, 2AE2, 1E2, 1E4, 2AE4, 1FR, 4IT, 3EA)	
⚠	1-573-856-11	ADAPTOR, CHANGE (CA)	
	3-367-445-11	HAND BOOK	
*	3-371-755-01	INDIVIDUAL CARTON	
*	3-371-757-01	CUSHION (RIGHT LEFT)	
	3-371-911-01	BELT, CARRYING	
	3-753-627-11	MANUAL, INSTRUCTION (ENGLISH, FRENCH, SPANISH, SWEDISH, PORTUGUESE) (US, 1AE1, 2AE2, 1UK, 1E2, 1E4, 1FR)	
	3-753-627-21	MANUAL, INSTRUCTION (ENGLISH, FRENCH, GERMAN, DUTCH, ITALIAN) (CA, 1AE2, 2AE4, 4IT, 1AU)	
	3-753-627-51	MANUAL, INSTRUCTION (ENGLISH, ARABIC) (3EA)	
	3-753-877-11	LIST, FREQUENCY (1AE1, 1AE2, 2AE2, 1UK, 2AE4, 1FR, 4IT)	
	3-753-877-21	LIST, FREQUENCY (US, CA)	
	3-753-877-31	LIST, FREQUENCY (1E2, 1E4, 3EA)	
	3-893-802-07	BOOK, GUIDE, WAVE	
	8-953-314-90	HEADPHONE MDR-E757 SET (1UK)	
	8-953-314-95	HEADPHONE MDR-E757/BK SET (EXCEPT 1UK)	
	X-3321-270-1	ATTACHMENT	

****

HARDWARE LIST

#1	7-682-149-15	SCREW +P 3X10
#2	7-685-154-19	SCREW +P 3X35 TYPE2 NON-SLIT
#3	7-685-546-14	SCREW +BTP 3X8 TYPE2 N-S

- EA: Saudi Arabia
  IT: Italian
  AE: AEP
  AU: Australian
  FR: French
  AE4: Germany

Note:	Note:
The components identified by mark ⚠ or dotted line with mark ⚠ are critical for safety. Replace only with part number specified.	Les composants identifiés par une marque ⚠ sont critiques pour la sécurité. Ne les remplacer que par une pièce portant le neméro spécifié.

English
91I0599-1
Printed in Japan

9-956-550-11
(Including 9-956-550-91, -92)

Sony Corporation
Personal Communication Group

Published by Customer Relations and Service Group

ICF-SW77

SONY

SERVICE MANUAL

US Model
Canadian Model
AEP Model
UK Model
E Model
Australian Model

SUPPLEMENT-1

File this supplement with the service manual.

Subject: 1. Correction
2. Change notice for Circuit.

1. **CORRECTION**

ELECTRICAL PARTS LIST

Correct your service manual as shown below.

Page	Ref. No.	Incorrect		Correct	
		Part No.	Description	Part No.	Description
61	C608	1-164-232-11	CERAMIC CHIP 0.01μF 50V		————
	L611	1-410-997-41	INDUCTOR CHIP 2.2μH	1-410-997-31	INDUCTOR CHIP 2.2μH
62	C805	1-135-161-21	TANTALUM CHIP 22μF 10% 6.3V	1-135-161-21	TANTALUM CHIP 22μF 10% 10V
	C806	1-135-156-21	TANTALUM CHIP 6.8μF 10% 6.3V	1-135-156-21	TANTALUM CHIP 6.8μF 10% 10V
63	IC806	8-759-507-13	IC X24C16S-C7000	8-759-506-20	IC X24C16S
	IC812	8-759-503-14	IC RF5RD501C	8-759-503-44	IC RF5RD501AC
64	Q802	8-729-924-14	TRANSISTOR DTA124TU	8-729-924-13	TRANSISTOR DTA124TU
	Q810	8-729-924-14	TRANSISTOR DTA124TU	8-729-924-13	TRANSISTOR DTA124TU
66	C215	1-163-088-00	CERAMIC CHIP 5pF 50V		————
	C328	1-164-774-11	FILM CHIP 0.0022μF 5% 16V	1-137-315-11	FILM CHIP 0.0022μF 5% 16V
	C329	1-164-782-11	FILM CHIP 0.01μF 5% 16V	1-137-323-11	FILM CHIP 0.01μF 5% 16V
67	C515	1-162-839-11	CERAMIC 0.01μF 10% 16V (EXCEPT 1UK)	1-162-839-11	CERAMIC 0.01μF 10% 16V
	C515	1-163-839-91	CERAMIC CHIP 1.5pF 0.25pF 50V (1UK)		————
	C538	1-162-839-11	CERAMIC 0.01μF 10% 16V (EXCEPT 1UK)	1-162-839-11	CERAMIC 0.01μF 10% 16V
	C538	1-163-839-91	CERAMIC CHIP 1.5pF 0.25pF 50V (1UK)		————
68	C702	1-163-093-00	CERAMIC CHIP 10pF 5% 50V	1-163-088-00	CERAMIC CHIP 5PF 50V
	CT201	1-141-327-11	CAP, VAP, TRIMMER (CHIP TYPE)	1-141-322-11	CAP, VAP, TRIMMER (CHIP TYPE)
	CT202	1-141-327-11	CAP, VAP, TRIMMER (CHIP TYPE)	1-141-322-11	CAP, VAP, TRIMMER (CHIP TYPE)
70	Q303	8-729-901-00	TRANSISTOR DTC124EK	8-729-901-01	TRANSISTOR DTC144EK
	Q314	8-729-901-00	TRANSISTOR DTC124EK	8-729-903-30	TRANSISTOR DTC144TK
71	R409	1-216-748-11	METAL CHIP 39K 5% 1/10W	1-216-748-11	METAL CHIP 39K 1% 1/10W
72	R706	1-216-093-00	METAL CHIP 68K 5% 1/10W	1-216-097-00	METAL CHIP 100K 5% 1/10W

2. **CHANGE NOTICE FOR CIRCUIT**
The circuit has been changed at mass-production stage. The schematic diagram, electrical parts and printed wiring boards of the new board are described in the supplement-1.

MICROCOMPUTER SECTION PRINTED WIRING BOARDS

- **Semiconductor Location**

Ref. No.	Location
D802	G-13
D803	H-13
D804	J-18
D805	J-18
D806	J-21
D807	J-13
D808	J-3
D809	J-20
D810	B-12
D811	B-12
D812	J-5
D813	C-27
D814	C-17
D815	F-27
D816	G-27
D817	E-17
D818	G-17
D819	E-2
IC801	C-22
IC802	F-18
IC803	F-25
IC804	F-22
IC805	C-25
IC806	F-13
IC807	J-16
IC808	I-12
IC809	I-17
IC811	J-5
IC812	J-22
IC814	D-1
IC815	B-16
IC816	C-16
IC817	J-3
IC1001	E-30
IC1002	D-30
Q801	C-1
Q802	J-21
Q803	J-18
Q804	J-18
Q805	C-13
Q806	D-16
Q807	D-16
Q808	C-23
Q810	J-21
Q811	J-20
Q812	D-1
Q1001	D-30

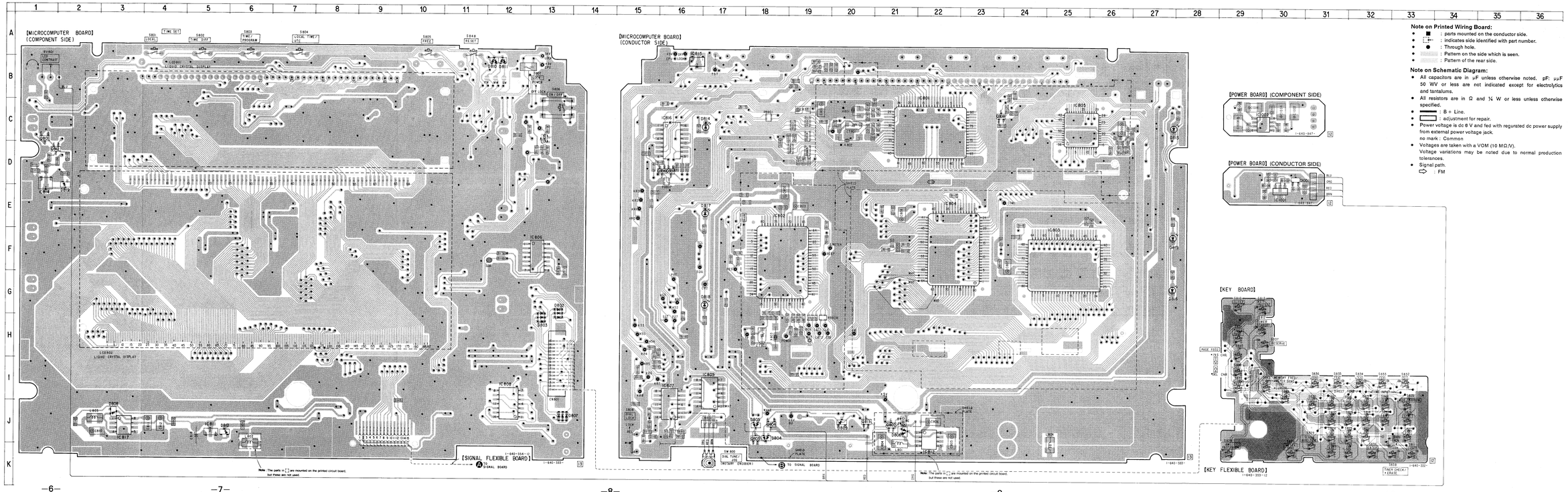

Note on Printed Wiring Board:

- ■ : parts mounted on the conductor side.
- ▯ : indicates side identified with part number.
- ● : Through hole.
- : Pattern on the side which is seen.
- : Pattern of the rear side.

Note on Schematic Diagram:

- All capacitors are in μF unless otherwise noted. pF: μμF 50 WV or less are not indicated except for electrolytics and tantalums.
- All resistors are in Ω and ¼ W or less unless otherwise specified.
- ▭ : B + Line.
- ▭ : adjustment for repair.
- Power voltage is dc 6 V and fed with regurated dc power supply from external power voltage jack.
  no mark : Common
- Voltages are taken with a VOM (10 MΩ/V). Voltage variations may be noted due to normal production tolerances.
- Signal path.
  ⇨ : FM

- **Signs for LCD on the Schematic Diagram Description.**

  The character display on LCD802 is activated by IC803 and IC804.

Sign indication of LCD802 on the schematic diagram	
Section	Indication on Schematic Diagram
Station Name Area Display	T1 – T6
Station Selection Line Display	W11 – W16...W51 – W56
Page Number Display	N1, N2

LCD driver IC804 drives 14 characters, T1 – T6, W51 – W56, N1, N2.
IC803 drives 24 characters, W11 – W16, W21 – W26, W31 – W36, W41 – W46.
Ex.: Characters displayed on W11 section are driven by IC804 COM1 – COM8 and IC803 S1 – S5.

LCD802

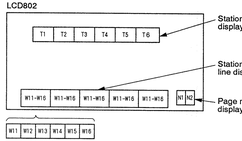

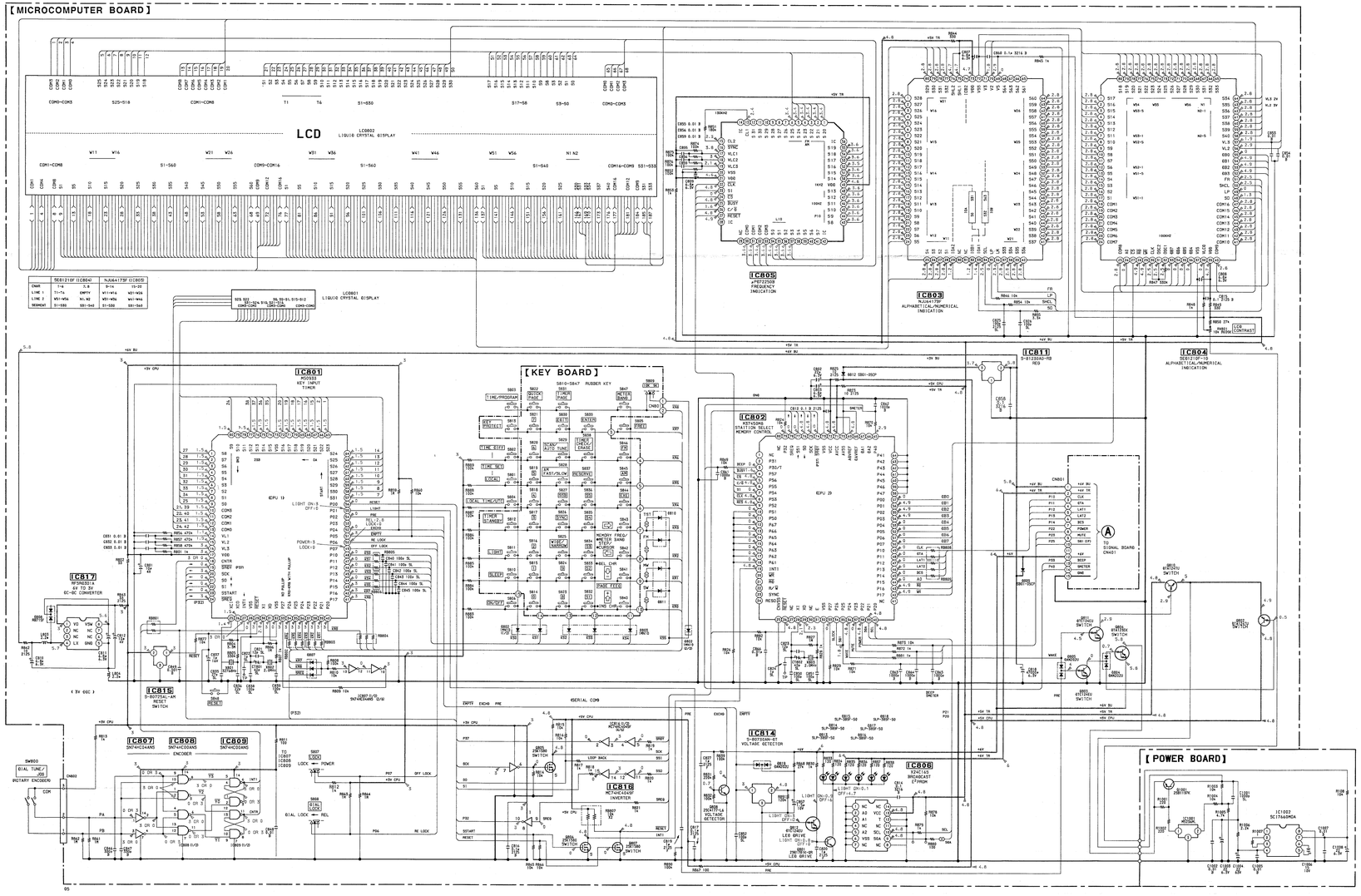

SIGNAL SECTION SCHEMATIC DIAGRAM

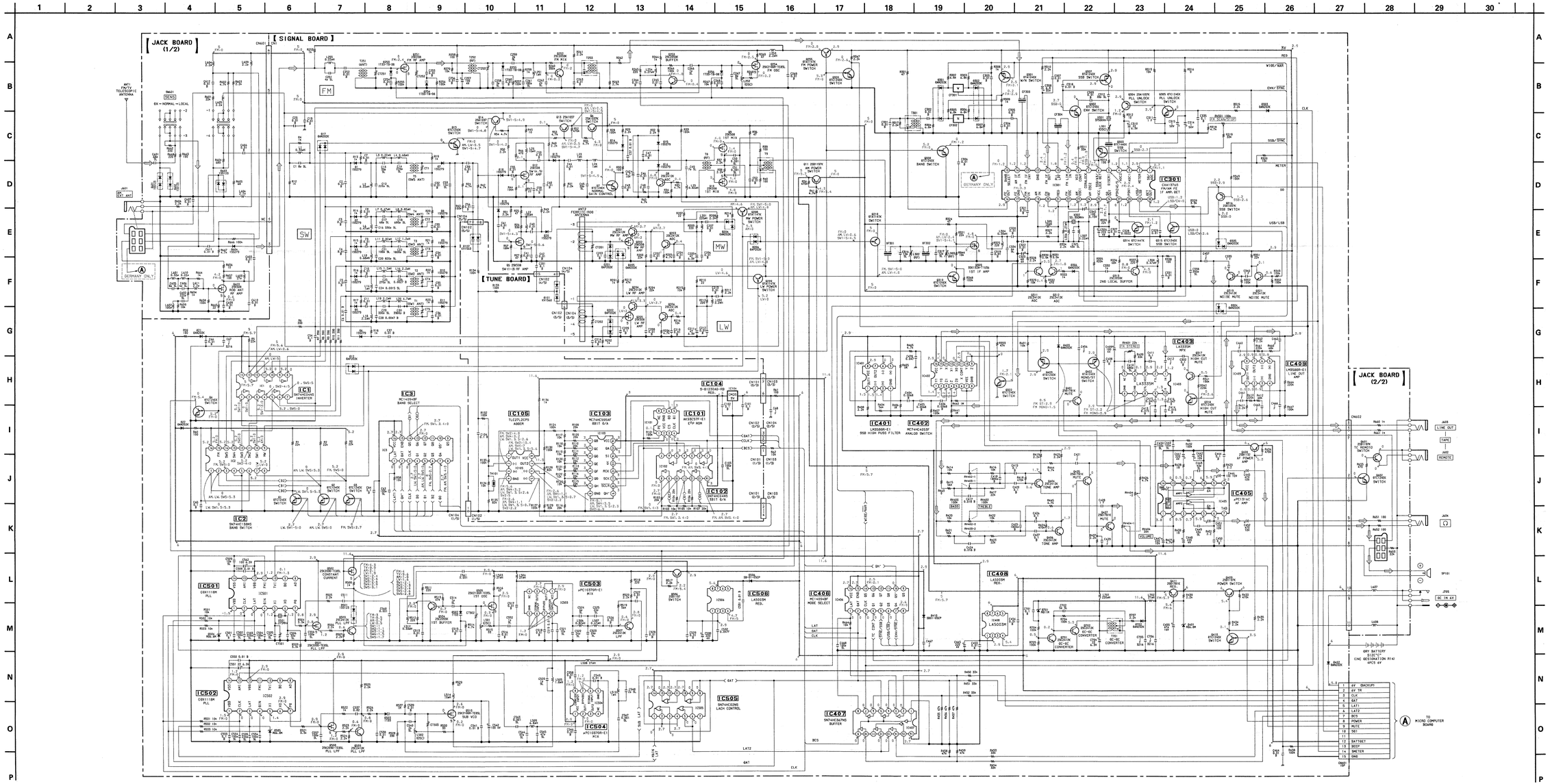

【SIGNAL BOARD】(COMPONENT SIDE)

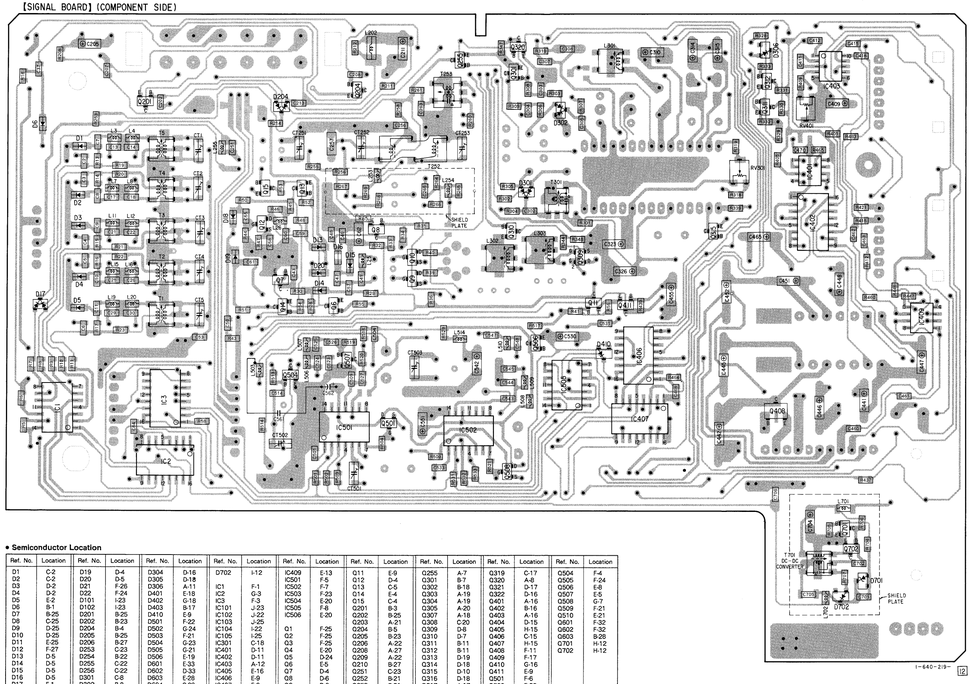

• Semiconductor Location

Ref. No.	Location	Ref. No.	Location	Ref. No.	Location	Ref. No.	Location	Ref. No.	Location	Ref. No.	Location	Ref. No.	Location	Ref. No.	Location	Ref. No.	Location
D1	C-2	D19	D-4	D304	D-16	D702	I-12	IC409	E-13	Q255	A-7	Q319	C-17	Q504	F-4
D2	C-2	D20	D-5	D305	D-18			IC501	F-5	Q12	B-7	Q320	A-8	Q505	F-24
D3	D-2	D21	F-26	D306	A-11	IC1	F-1	IC502	F-7	Q13	B-18	Q321	D-17	Q506	E-8
D4	D-2	D22	F-24	D401	E-18	IC2	G-3	IC503	F-23	Q14	E-4	Q322	D-16	Q507	E-5
D5	E-2	D101	I-23	D402	G-18	IC3	F-3	IC504	E-20	Q15	C-4	Q401	A-16	Q508	G-7
D6	B-1	D102	I-23	D403	B-17	IC101	J-23	IC505	F-6	Q201	B-3	Q305	A-20	Q402	B-16	Q509	F-21
D7	B-25	D201	B-25	D410	E-9	IC102	J-22	IC506	E-20	Q202	B-25	Q307	A-18	Q403	A-16	Q510	F-21
D8	C-25	D202	B-23	D501	F-22	IC103	J-25			Q203	A-21	Q308	C-20	Q404	D-15	Q601	F-32
D9	D-25	D204	B-4	D502	G-24	IC104	I-22	Q1	F-25	Q204	B-5	Q309	D-8	Q405	H-15	Q602	F-32
D10	D-25	D205	B-25	D503	F-21	IC105	I-25	Q2	F-25	Q205	B-23	Q310	D-7	Q406	C-15	Q603	B-28
D11	E-25	D206	B-27	D504	G-23	IC301	C-18	Q3	F-25	Q206	A-22	Q311	B-11	Q407	H-15	Q701	H-12
D12	F-27	D253	C-23	D505	G-21	IC401	D-11	Q4	E-20	Q208	A-27	Q312	B-11	Q408	F-11	Q702	H-12
D13	D-5	D254	B-22	D506	E-19	IC402	D-11	Q5	D-24	Q209	A-22	Q313	D-19	Q409	F-17		
D14	D-5	D255	C-22	D601	E-33	IC403	A-12	Q6	E-5	Q210	B-27	Q314	D-18	Q410	G-16		
D15	D-5	D256	C-22	D602	D-33	IC405	E-16	Q7	D-4	Q251	C-23	Q315	D-10	Q411	E-9		
D16	D-5	D301	C-8	D603	E-28	IC406	E-9	Q8	D-6	Q252	B-21	Q316	D-18	Q501	F-6		
D17	E-1	D302	B-8	D604	C-29	IC407	F-9	Q9	D-6	Q253	C-21	Q317	A-17	Q502	E-22		
D18	C-4	D303	A-20	D701	H-12	IC408	D-17	Q10	D-6	Q254	C-22	Q318	B-17	Q503	F-22		

【SIGNAL BOARD】(CONDUCTOR SIDE)

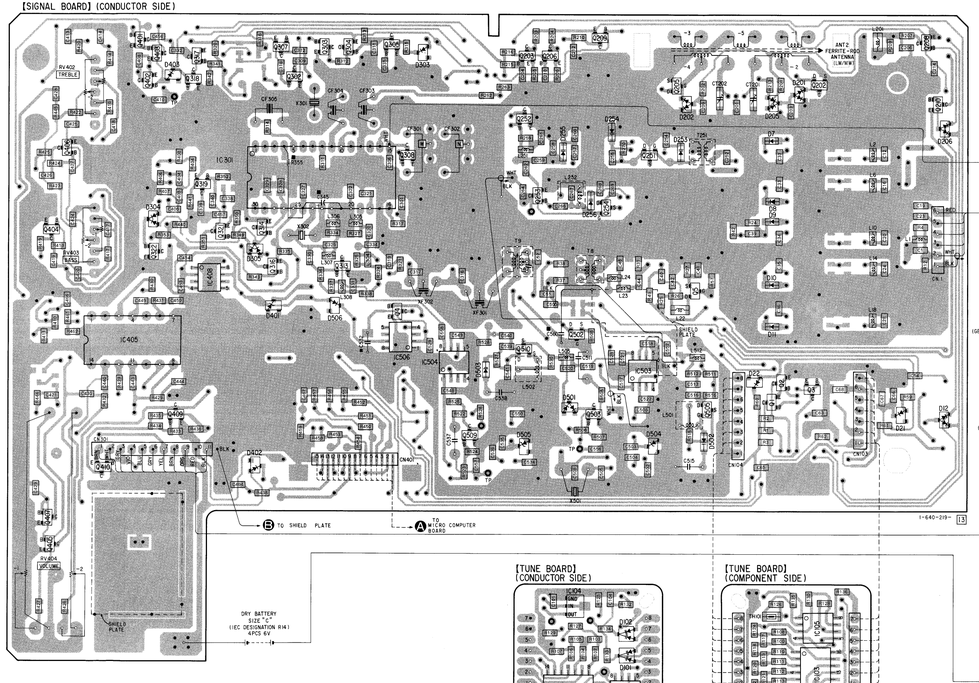

【TUNE BOARD】(CONDUCTOR SIDE)

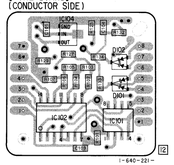

【TUNE BOARD】(COMPONENT SIDE)

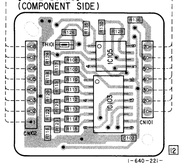

【JACK BOARD】(CONDUCTOR SIDE)

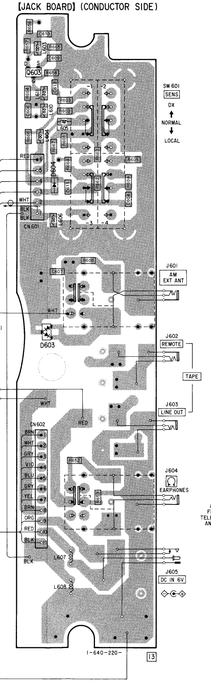

【JACK BOARD】(COMPONENT SIDE)

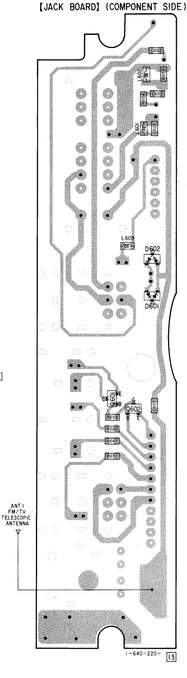

EXPLODED VIEWS

- **ADDED PARTS**

: Added portion

Page	Former	New
59	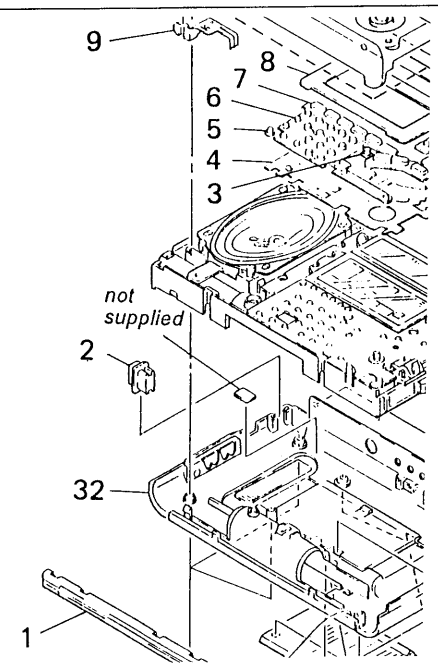	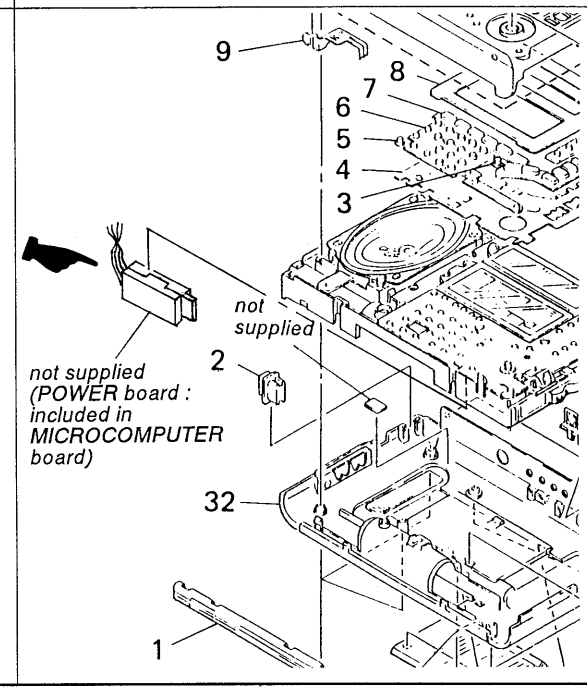

ELECTRICAL PARTS LIST

• CHANGED PARTS

Page	Ref. No.	Former					New				
		Part No.	Description				Part No.	Description			
61	R654	1-216-025-00	METAL CHIP	100	5%	1/10W	1-216-049-00	METAL CHIP	1K	5%	1/10W
	R656	1-216-017-00	METAL CHIP	47	5%	1/10W	1-216-001-00	METAL CHIP	10	5%	1/10W
	R657	1-216-017-00	METAL CHIP	47	5%	1/10W	1-216-025-00	METAL CHIP	100	5%	1/10W
62	R665	1-216-017-00	METAL CHIP	47	5%	1/10W	1-216-009-00	METAL CHIP	22	5%	1/10W
	C804	1-135-097-21	TANTALUM CHIP	15μF	10%	10V		————			
	C805	1-135-161-21	TANTALUM CHIP	22μF	10%	10V		————			
	C806	1-135-156-21	TANTALUM CHIP	6.8μF	10%	10V		————			
63	D806	8-719-988-82	DIODE RB715F					————			
	IC806	8-759-506-20	IC X24C16S				8-759-074-45	X24C16S-3.0-C7000			
	IC812	8-759-503-44	IC RF5RD501AC					————			
	L801	1-412-637-51	INDUCTOR	330μH				————			
	L802	1-410-793-51	INDUCTOR CHIP	2.2mH				————			
64	R840	1-216-001-00	METAL CHIP	10	5%	1/10W		————			
	R841	1-216-803-11	METAL CHIP	33	5%	1/16W		————			
	R852	1-216-848-11	METAL CHIP	180K	5%	1/16W	1-216-845-11	METAL CHIP	100K	5%	1/16W
65	S801	1-570-990-11	SWITCH, TACT (LOCAL)				1-554-088-11	SWITCH, KEY BOARD(LOCAL)			
	S802	1-570-990-11	SWITCH, TACT (TIME DIFF)				1-554-088-11	SWITCH, KEY BOARD(TIME DIFF)			
	S803	1-570-990-11	SWITCH, TACT (TIME/PROGRAM)				1-554-088-11	SWITCH, KEY BOARD(TIME/PROGRAM)			
	S804	1-570-990-11	SWITCH, TACT (LOCAL TIME/VTC)				1-554-088-11	SWITCH, KEY BOARD(LOCAL TIME/VTC)			
	S805	1-570-990-11	SWITCH, TACT (FREE)				1-554-088-11	SWITCH, KEY BOARD(FREE)			
	S848	1-570-990-11	SWITCH, TACT (RESET)				1-554-088-11	SWITCH, KEY BOARD(RESET)			
66	C54	1-164-232-11	CERAMIC CHIP	0.01μF		50V	1-164-004-11	CERAMIC CHIP	0.1μF	10%	25V
	C314	1-126-603-11	ELECT	4.7μF	20%	35V	1-126-193-11	ELECT	1μF	20%	50V
	C345		————				1-131-395-00	TANTALUM	100μF	10%	3.15V
	C404	1-164-182-11	CERAMIC CHIP	0.0033μF	10%	50V	1-163-019-00	CERAMIC CHIP	0.0068μF	10%	50V
	C405	1-164-182-11	CERAMIC CHIP	0.0033μF	10%	50V	1-163-019-00	CERAMIC CHIP	0.0068μF	10%	50V
	C406	1-164-182-11	CERAMIC CHIP	0.0033μF	10%	50V	1-163-019-00	CERAMIC CHIP	0.0068μF	10%	50V
67	C458	1-164-346-11	CERAMIC CHIP	1μF		16V		————			
	C470		————				1-163-809-11	CERAMIC CHIP	0.047μF	10%	25V
	C507	1-124-778-00	ELECT CHIP	22μF	20%	6.3V		————			
	C512	1-164-232-11	CERAMIC CHIP	0.01μF		50V		————			
	C553	1-163-091-00	CERAMIC CHIP	8pF		50V		————			
68	C554	1-163-091-00	CERAMIC CHIP	8pF		50V		————			
	C560		————				1-102-973-00	CERAMIC	100pF	5%	50V
	C561		————				1-162-294-31	CERAMIC	0.001μF	10%	50V
	C562		————				1-131-395-00	TANTALUM	100μF	10%	3.15V
	CF303	1-577-599-11	FILTER, CERAMIC				1-567-097-61	FILTER, CERAMIC			
	CF304	1-577-599-11	FILTER, CERAMIC				1-567-097-61	FILTER, CERAMIC			
	CF305	1-577-599-11	FILTER, CERAMIC				1-577-572-31	FILTER, CERAMIC			
69	L20	1-410-993-11	INDUCTOR CHIP	1μH			1-412-002-31	INDUCTOR CHIP	4.7μH		
	L511	1-410-989-11	INDUCTOR CHIP	0.47μH				————			
70	R45	1-216-017-00	METAL CHIP	47	5%	1/10W	1-216-001-00	METAL CHIP	10	5%	1/10W
	R46		————				1-216-190-00	METAL CHIP	470	5%	1/10W
	R47	1-216-017-00	METAL CHIP	47	5%	1/10W	1-216-009-00	METAL CHIP	22	5%	1/10W

Page	Ref. No.	Former					New				
		Part No.	Description				Part No.	Description			
71	R65						1-216-065-00	METAL CHIP	4.7K	5%	1/10W
	R205	1-216-049-00	METAL CHIP	1K	5%	1/10W	1-216-065-00	METAL CHIP	4.7K	5%	1/10W
	R206	1-216-049-00	METAL CHIP	1K	5%	1/10W	1-216-065-00	METAL CHIP	4.7K	5%	1/10W
	R317	1-216-061-00	METAL CHIP	3.3K	5%	1/10W	1-216-057-00	METAL CHIP	2.2K	5%	1/10W
	R318	1-216-085-00	METAL CHIP	33K	5%	1/10W	1-216-065-00	METAL CHIP	4.7K	5%	1/10W
	R340	1-216-081-00	METAL CHIP	22K	5%	1/10W					
	R344	1-216-081-00	METAL CHIP	22K	5%	1/10W	1-216-073-00	METAL CHIP	10K	5%	1/10W
	R355						1-247-901-11	CARBON	820K	5%	1/4W
	R409	1-216-748-11	METAL CHIP	39K	1%	1/10W	1-216-689-11	METAL CHIP	33K	5%	1/10W
72	R428	1-216-011-11	METAL CHIP	27	5%	1/10W	1-216-007-00	METAL CHIP	18	5%	1/10W
	R430	1-216-011-11	METAL CHIP	27	5%	1/10W	1-216-007-00	METAL CHIP	18	5%	1/10W
	R442	1-216-121-00	METAL CHIP	1M	5%	1/10W					
	R443	1-216-121-00	METAL CHIP	1M	5%	1/10W					
	R465						1-216-065-00	METAL CHIP	4.7K	5%	1/10W
	R534	1-216-057-00	METAL CHIP	2.2K	5%	1/10W					

• ADDED BOARD

Ref. No.	Part No.	Description				Remark
		POWER BOARD (Included in MICROCOMPUTER board)				
		**********				
		< CAPACITOR >				
C1001	1-163-141-00	CERAMIC CHIP	0.001uF	5%	50V	
C1002	1-164-232-11	CERAMIC CHIP	0.01uF	10%	100V	
C1003	1-135-161-21	TANTAL CHIP	22uF	10%	10V	
C1004	1-135-161-21	TANTAL CHIP	22uF	10%	10V	
C1005	1-164-232-11	CERAMIC CHIP	0.01uF	10%	100V	
C1006	1-135-097-21	TANTAL CHIP	15uF	20%	10V	
C1007	1-164-232-11	CERAMIC CHIP	0.01uF	10%	100V	
C1008	1-165-161-21	TANTAL CHIP	22uF	10%	10V	
		< IC >				
IC1001	8-759-630-27	IC M5236ML				
IC1002	8-759-513-52	IC SCI7660MOA				

Ref. No.	Part No.	Description				Remark
		< TRANSISTOR >				
Q1001	8-729-904-87	TRANSISTOR 2SB1197K-R				
		< RESISTOR >				
R1001	1-216-033-00	METAL CHIP	220	5%	1/10W	
R1002	1-216-033-00	METAL CHIP	220	5%	1/10W	
R1003	1-216-675-11	METAL FILM CHIP	10K	0.5%	1/10W	
R1004	1-216-073-00	METAL CHIP	10K	5%	1/10W	
R1005	1-216-667-11	METAL CHIP	4.7K	0.5%	1/10W	
R1006	1-216-057-00	METAL CHIP	2.2K	5%	1/10W	
R1007	1-216-121-00	METAL CHIP	1M	5%	1/10W	
R1008	1-216-073-00	METAL CHIP	10K	5%	1/10W	

9-956-550-83

Sony Corporation
Personal Telecommunications Group

English
93G05101-1
Printed in Japan

Published by Audio Sector Quality Assurance Dept.